NABCO Entrances Inc. S82 W18717 Gemini Drive Muskego, Wisconsin 53150
Phone: (877) 622-2694 Fax: (888) 679-3319 www.nabcoentrances.com
NABCO hours of Operation: Monday to Friday 8:00 a.m.- 4:30 p.m. (Central Time)

!!! ATTENTION !!!

BEFORE INSTALLING THE H105 HURRICANE SLIDE DOOR SYSTEM PLEASE REFER TO THE CERTIFICATION DOCUMENT PACKED WITHIN THIS DECAL PACKET SHOWING DETAILED ANCHORING DIAGRAMS:

- **Level E Impact (FL39894 Installation Instructions)**

DETAILED ANCHORING DIAGRAMS MUST BE ADHERED TO.

!!! ATTENTION !!!

THIS PAGE IS INTENTIONALLY LEFT BLANK

Model GT1175 (H105 Level D) and (H105 Level E)
Hurricane Slide Door Installation Manual
with OPUS Control

P/N C-00374 Rev 6-2-24

NABCO Entrances Inc. S82 W18717 Gemini Drive Muskego, Wisconsin 53150
Phone: (877) 622-2694 Fax: (888) 679-3319 www.nabcoentrances.com
NABCO hours of Operation: Monday to Friday 8:00 a.m.- 4:30 p.m. (Central Time)

Associated Manuals Part Numbers: *OPUS Wiring and Programming Manual (P/N C-00139)*
Automatic Sliding Door Owner's Manual (P/N C-00109) for Decal Installation
NABCO Price Book" for Sensors, Switches, and Accessories (P/N 16-9244-30)
Level E Impact (FL39894 Installation Instructions)

WARNING

- **Turn OFF all power to the Automatic Door if a Safety System is not working.**
- **Instruct the Owner to keep all power turned OFF until corrective action can be achieved by a NABCO trained technician. Failure to follow these practices may result in serious consequences.**
- **NEVER leave a Door operating without all Safety detection systems operational.**

Table of Contents

CHAPTER 1: WARNING LABELS **6**

CHAPTER 2: GENERAL SAFETY RECOMMENDATIONS **6**

CHAPTER 3: SCOPE **7**
- SECTION 3.1: To the Installer 7
- SECTION 3.2: Objective 7

CHAPTER 4: GETTING STARTED **7**
- SECTION 4.1: Request a User Name/Password to gain access into the "myNABCO" portal 7
- SECTION 4.2: Associated Video QR Code Link 7
- SECTION 4.3: Mechanical Configurations 7
- SECTION 4.4: Emergency Egress 7
- SECTION 4.5: Feature Comparison between Level D, Non-Impact, and Level E 8
- SECTION 4.6: Header Components 8

CHAPTER 5: BEFORE ASSEMBLING DOOR FRAME **8**
- SECTION 5.1: Inspect the Rough Opening 8
- SECTION 5.2: Remove the Header Cover 9
- SECTION 5.3: Shut OFF CIrcuit Breaker 9

CHAPTER 6: ASSEMBLE DOOR FRAME **9**
- SECTION 6.1: Position the Door Frame 9

CHAPTER 7: SECURE DOOR FRAME TO BUILDING **10**
- SECTION 7.1: Anchor Placements 10

CHAPTER 8: WIRE THE ROCKER SWITCH **10**

CHAPTER 9: INSTALL THE SURFACE THRESHOLD **11**
- SECTION 9.1: Full Open, Surface Threshold 11
- SECTION 9.2: Fixed Sidelite, Surface Threshold 12

CHAPTER 10: INSTALL THE RECESSED THRESHOLD 12

CHAPTER 11: INSTALL THE FIXED SIDELITE 13

SECTION 11.1: Secure the Fixed Sidelite Panel to Door Frame 13
SECTION 11.2: Install the Double Roller Assembly 14
SECTION 11.3: Install the Floor Bracket 14

CHAPTER 12: INSTALL THE FULL OPEN SIDELITE 15

SECTION 12.1: Install the Limit Arm 15
SECTION 12.2: Attach the Swing Sidelite to Pivots 16
SECTION 12.3: Complete Installation of the Limit Arm 16
SECTION 12.4: Adjust the Ball Detents 16

CHAPTER 13: INSTALL THE SLIDE DOOR 17

SECTION 13.1: Lift Carrier onto the Track 17
SECTION 13.2: Insert Bottom Guide into Threshold (Full Open Slide Door) 18
SECTION 13.3: Secure Bottom Guide to the Fixed Slide Door 18

CHAPTER 14: FINISH INSTALLING THE SURFACE THRESHOLD 19

SECTION 14.1: Anchor Placements 19
SECTION 14.2: Threshold Maintenance 19

CHAPTER 15: 110 VAC GENERAL WIRING 19

CHAPTER 16: GLAZING 20

SECTION 16.1: Door Panel Setting Blocks 20
SECTION 16.2: Glass Stops for H105 (Non-Impact) 21
SECTION 16.3: Glass Stops for H105 Level D (Impact) 21
SECTION 16.4: Glass Stops for H105 Level E (Impact) 21

CHAPTER 17: ADJUSTMENTS 22

SECTION 17.1: Adjust Rollers on Carrier 22
SECTION 17.2: Hanger Rollers 22
SECTION 17.3: Anti-Rise Rollers 22
SECTION 17.4: Eccentric Retainer Rollers 23
SECTION 17.5: Adjust the Interlock 23
SECTION 17.6: Adjust Pressure of the Bottom Panic Catch 24
SECTION 17.7: Adjust Preload 24
SECTION 17.8: Correct Preload Misalignment 25

CHAPTER 18: INSTALL WEATHERING 25

SECTION 18.1: Fixed Sidelite Slide Door 25
SECTION 18.2: Full Open 25
SECTION 18.3: Apply Caulking Bead 26

CHAPTER 19: SLIDE DOOR SAFETY CHECK 26

SERVICE PARTS: FULL OPEN, NH KIT, H105: P/N A-00625 27

SERVICE PARTS: FIXED SIDELITE, H105 RH KIT: P/N A-00624; LH KIT: A-00623 28

SERVICE PARTS: HEADER 29

SERVICE PARTS: SLIDE DOOR CARRIERS 32

SERVICE PARTS: LOCK OPTION (WITH PANIC DEVICE) 33

SERVICE PARTS: LOCK OPTIONS (NO PANIC DEVICE) **34**
SERVICE PARTS: FULL OPEN SIDELITE **36**
SERVICE PARTS: LEFT HAND FULL OPEN SIDELITE **37**
SERVICE PARTS: RIGHT HAND FULL OPEN SIDELITE **38**
SERVICE PARTS: FULL OPEN SLIDE DOOR **41**
SERVICE PARTS: LEFT HAND FULL OPEN SLIDE DOOR **42**
SERVICE PARTS: RIGHT HAND FULL OPEN SLIDE DOOR **43**
SERVICE PARTS: FIXED SIDELITE **45**
SERVICE PARTS: LEFT HAND FIXED SIDELITE **46**
SERVICE PARTS: RIGHT HAND FIXED SIDELITE **47**
SERVICE PARTS: FIXED SIDELITE SLIDE DOOR **49**
SERVICE PARTS: LEFT HAND FIXED SIDELITE SLIDE DOOR **50**
SERVICE PARTS: RIGHT HAND FIXED SIDELITE SLIDE DOOR **51**

CHAPTER 1: WARNING LABELS

Warning labels are universal and used to alert an individual of potential harm to one's self or to others. The following warning labels are listed in a hierarchy order that defines the most potential danger first, and the least potential danger last. Please refer to this page in the event that a warning label is displayed within this manual and further definition needs to be explained.

DANGER **Indicates potentially dangerous situations. Danger is used when there is a hazardous situation where there is a *high* probability of severe injury or death. It should not be considered for property damage unless personal injury risk is present.**

WARNING **Indicates a hazardous situation which has *some* probability of severe injury. It should not be considered for property damage unless personal injury risk is present.**

CAUTION **Indicates a hazardous situation which *may result in a minor injury*. Caution should not be used when there is a possibility of serious injury. Caution should not be considered for property damage accidents unless a personal injury risk is present.**

Attention: **A situation where material could be damaged or the function impaired.**

Notice: **Indicates a statement of company policy as message relates to the personal safety or protection of property. Notice should not be used when there is a hazardous situation or personal risk.**

Note: Indicates important information that provides further instruction.

CHAPTER 2: GENERAL SAFETY RECOMMENDATIONS

DANGER **Disconnect all power to the junction box prior to making any electrical connections. Failure to do so may result in serious personal or fatal injury. When uncertain whether power supply is disconnected, always verify using a voltmeter.**

DANGER **Do not place finger or uninsulated tools inside the electrical controller. Touching wires or other parts inside the enclosure may cause electrical shock, serious injury or death.**

WARNING **Do not install, operate or service this product unless you have read and understand the General Safety Recommendations and Warning Labels contained in this manual. Failure to do so may result in bodily injury, or property damage.**

WARNING **Read, study and understand the installation and operating instructions contained in, or referenced within this manual before operating. If you do not understand the instruction, ask a qualified technician. Failure to do so may result in bodily injury or property damage and will nullify all warranties.**

WARNING **For Indoor use only.**

WARNING **Use this operator only with Nabco sliding doors**

CAUTION **If the door appears broken or does not seem to work correctly, it should be immediately removed from service until repairs can be carried out or a qualified service technician is contacted for corrective action.**

Notice: **This manual and the owner's manual and all other associated manuals must be given to and retained by the purchasing facility or end user.**

Notice: **It is the responsibility of the purchasing facility or end user to keep warning instructional labels in accordance with ANSI A156.10.**

Notice: **Wiring must meet all local, state, federal or other governing agency codes.**

Notice: **All electrical troubleshooting or service must be performed by qualified electrical technicians and must comply with all applicable governing agency codes.**

CHAPTER 3: SCOPE

SECTION 3.1: To the Installer

The purpose of this manual is to familiarize the installer and purchaser with the proper installation and operation of this system. It is essential that this equipment be properly installed and operational before the door is used by the public. It is the installer's responsibility to inspect the operation of the entrance system to be sure it complies with any applicable standards. In the United States ANSI Standard 156.10 covers the GT1175 Hurricane Slide Door System, and ANSI Standard Z97.1 covers Glass Installation. Other local standards or codes may apply. Use them in addition to the ANSI standard. The GT1175 Hurricane Slide Door is listed with the Underwriters Laboratory and is identified as such on the label.

Instruct the building owners and operator on the essentials of the operation of the door and this device. The owner should follow these instructions to determine whether the door is operating properly and should immediately call for service if there is any malfunction. All installation changes and adjustments must be made by qualified, NABCO trained technicians.

SECTION 3.2: Objective

The GT1175 Hurricane Slide Door is designed to be installed within a Rough Opening of a Building. The door function is controlled by the OPUS Control that offers many features to accommodate most installation options. This manual offers step by step instructions.

CAUTION **A pedestrian Door that does not have Its glass sections installed at the Factory shall specify that the glazing material employed is to comply with the requirement in UL 325 par.30.5.1:**

> **"The glazing material in both fixed and sliding panels of all sliding doors and in all unframed swinging doors shall comply with the requirements in the Performance Specifications and Methods of Test for Safety Glazing Material Used in Buildings, ANSI Z97.1. Glazing material for other pedestrian doors shall also comply with ANSI Z97.1, except that single strength or heavier glass may be used for those portions of doors involving a glazed area of less than 1ft^2 (0.9 m^2) and having no dimension greater than 18 in (457 mm)".**

CHAPTER 4: GETTING STARTED

SECTION 4.1: Request a User Name/Password to gain access into the "myNABCO" portal

To gain access into the "myNABCO" portal, the User must first have an assigned User Name and Password. To request a User Name and Password, the following must be done:

1. Open the NABCO Website: www.nabcoentrances.com
2. Enter the "myNABCO" portal → Request Access → Fill out the Request Access Form → Click onto Register
   a. A User Name and Password will be emailed back to the requestor.

SECTION 4.2: Associated Video QR Code Link

How to locate Service Parts Pages on the NABCO website		**Android Phone Instruction to Scan QR Code** *Note: Scanning QR Links using an Android Phone may vary.* 1. Google to download QR Scanner. Install. 2. Place phone in front of QR Code. Scan. **I-Phone Instruction to Scan QR Code** 1. Click on Camera icon. 2. Place phone in front of QR Code. Scan.

SECTION 4.3: Mechanical Configurations

- Single Slide: (1) Slide Door that slides to the right or left with (1) Sidelite Panel.
- Bi-Part: (2) Slide Doors that slide apart from the center with (2) Sidelite Panels.

SECTION 4.4: Emergency Egress

- Full Open: Both the Slide door and Swing Sidelite breakout for emergency egress.
- Fixed Sidelite: Sidelite is secured to the Header and Jamb Tube. Only the Slide door breaks out.

SECTION 4.5: Feature Comparison between Level D, Non-Impact, and Level E

Feature	Level D	Non-Impact	Level E
Full Open Slide Door	Yes	Yes	Yes
Fixed Sidelite Slide Door	Yes	Yes	
1/4 inch Non-Impact Glass (Dry Glaze)		Yes	
7/16 inch Impact (Dry or Wet Glaze)	Yes		
9/16 inch Impact Glass (Dry Glaze)			Yes

SECTION 4.6: Header Components

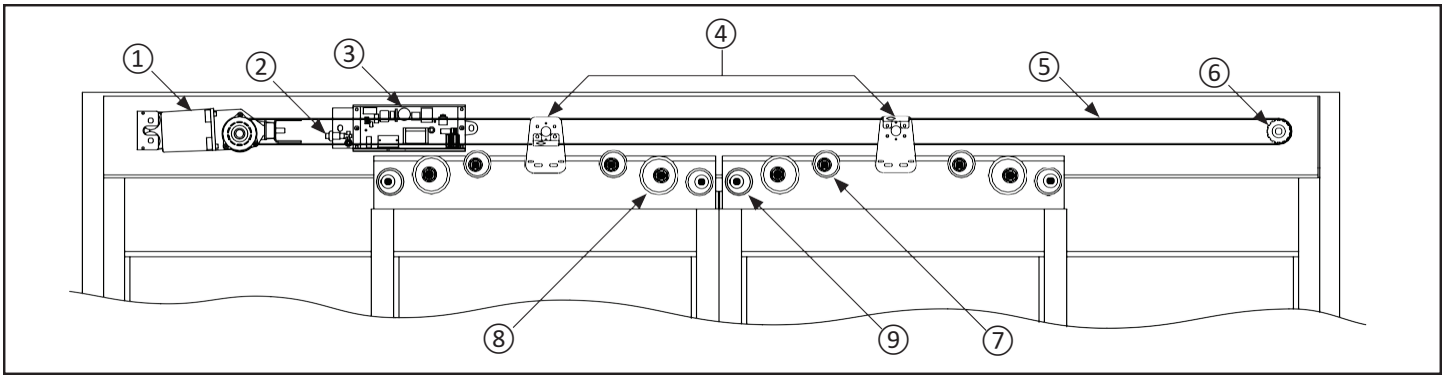

1	VS 150 Operator	V-00914	6	Idler Assembly	A-01419
2	Power Cut Off Switch	N/A	7	Hurricane Anti-Rise	A-00305
3	Opus Control Assembly	A-01418	8	Hanger Roller	A-00162
4	VS 150 Belt Clip	M-02038	9	Eccentric Carrier Retainer	A-00319
5	Timing Belt 3/4inch wide	V-00916			

CHAPTER 5: BEFORE ASSEMBLING DOOR FRAME

SECTION 5.1: Inspect the Rough Opening

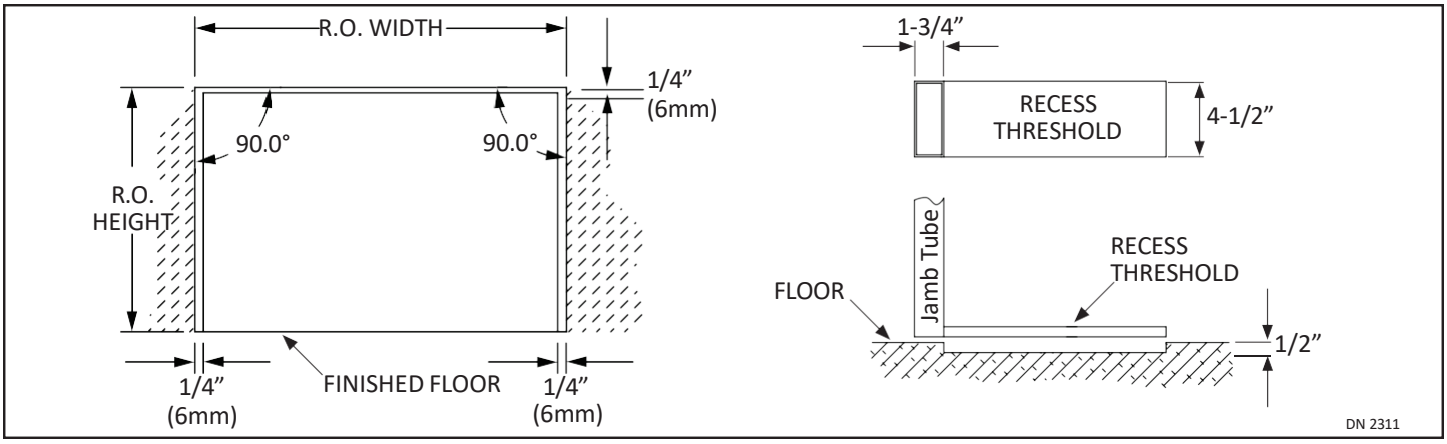

1. Ensure the Rough Opening is correct size.
   - ▶ The width of the Rough Opening should equal: **PACKAGE WIDTH + 1/4 INCH ON EACH SIDE**
   - ▶ The height of the Rough Opening should equal: **PACKAGE HEIGHT + 1/4 INCH**

Note: Make allowances for tile or other existing materials that may change the floor height.

2. Ensure the floor is level across the entire opening. If used, check recessed threshold across the door opening.

SECTION 5.2: Remove the Header Cover

1. Remove (2) 10-24 x .625 inch screws. Remove Header Cover by lifting it up and then pulling it out.
2. Unplug the Sensor (if equipped). Remove Parts boxes and/or Parts bags from inside Header.

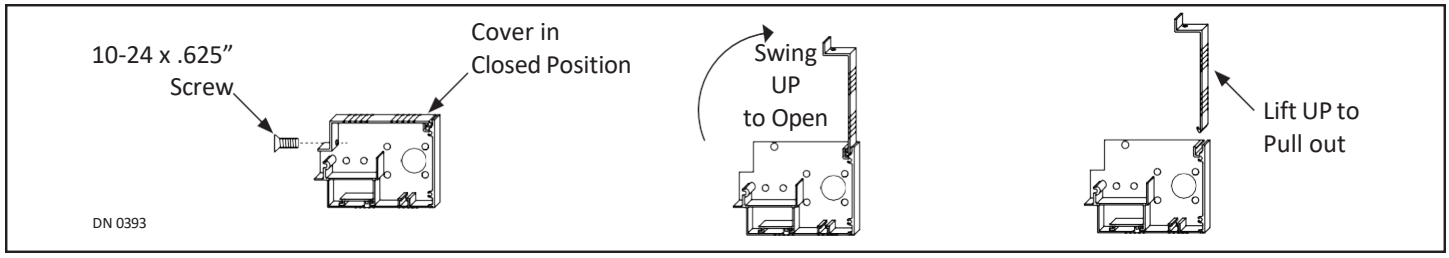

SECTION 5.3: Shut OFF Circuit Breaker

WARNING **Shut the installation site branch Circuit Breaker OFF. Failure to do so may result in serious personal or fatal injury. When uncertain whether power supply is disconnected, always verify using a voltmeter.**

WARNING **All high voltage electrical connections must be made by licensed electricians according to National and Local electrical codes/regulations.**

CHAPTER 6: ASSEMBLE DOOR FRAME

SECTION 6.1: Position the Door Frame

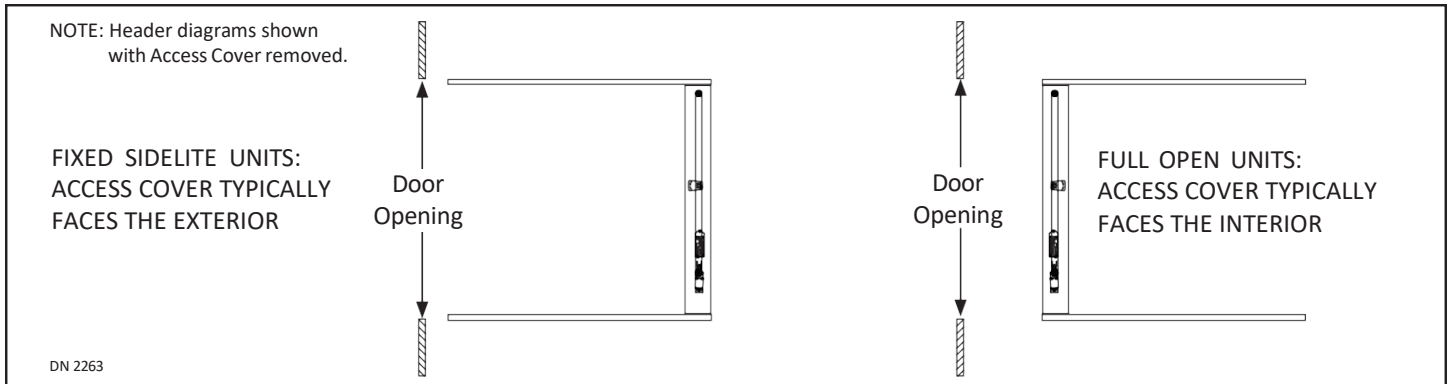

Figure 1 Orientate the Door Frame in relation to the Building

1. Position Jamb Tubes on either side of Header according to the instruction sticker located on each Jamb Tube, showing proper location and orientation. Ensure the removable cover side of Header is facing up.
2. Orientate the Frame in relation to the building:
   - ▶ Fixed Sidelite: Removable Cover side of Header must face the Exterior side of building.
   - ▶ Full Open: Removable Cover side of Header must face the Interior side of building.
3. Secure the Header to each Jamb Tube with (6) 1/4-20 x .75 inch Whizlock screws.
   a. If installed correctly there will be a 1/8 inch gap between the bottom of Jamb Tubes and the flat surface.

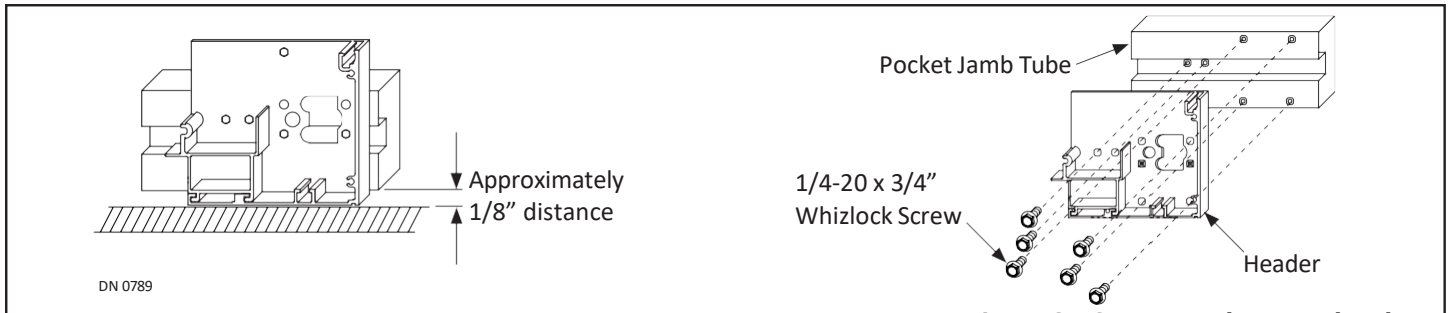

Figure 2 Secure Header to Jamb Tubes

CHAPTER 7: SECURE DOOR FRAME TO BUILDING

1. Lift to position the assembled Frame into the rough opening.
   a. To prevent electrical interference for the 120 VAC Line, always route 120 VAC Power through the Header End Cap that is opposite to the controller and motor/operator.
   b. Please refer to “Model GT 1175 Electrical Installation Manual”; P/N C-00198 for detailed information.
2. Shim and Plumb Jamb Tubes in both planes to ensure the rough opening allows a 1/4 inch clearance. Shim and plumb the Header or the Transom Horizontal at the top to ensure the rough opening allows a 1/4 inch clearance.

Figure 3 Shim and Plumb Frame

SECTION 7.1: Anchor Placements

Note: The following certification documents can also be found online at: www.nabcoentrances.com

For detailed anchoring information, please refer to the certification documents that have been packed with this manual:

● Level D Impact (20-1106.04) ● Non-Impact (20-1106.03) ● Level E (FL39894 Installation Instructions)

CHAPTER 8: WIRE THE ROCKER SWITCH

1. Go inside the Header. Locate the Pin wiring that is attached to the Main Harness.
2. Draw Pin wiring through a hole located at the side of Header and Jamb Tube. Continue to route wiring down the Jamb Tube.
3. Pull the Pin Wiring out, through the cut out.
4. Obtain (1) loose 5 Circuit Pin Housing from the Parts Box. Insert each Pin into the 5 Circuit Pin Housing accordingly:
   a. 1 = Red, 2 = Orange/White, 3 = Blue, 4 = Green, 5 = Orange
5. Obtain (1) Switch Assembly and (2) 10-32 x 1/2 inch Phillips Head Screws from the Parts Box.
6. Connect the Switch Harness from the back of the Switch Assembly to the Main Harness. Place extra wiring back inside the Jamb Tube.
7. Insert the Switch Assembly into the Cut Out. Secure the Switch Assembly to the Jamb Tube with (2) 10-32 x 1/2 inch Screws.

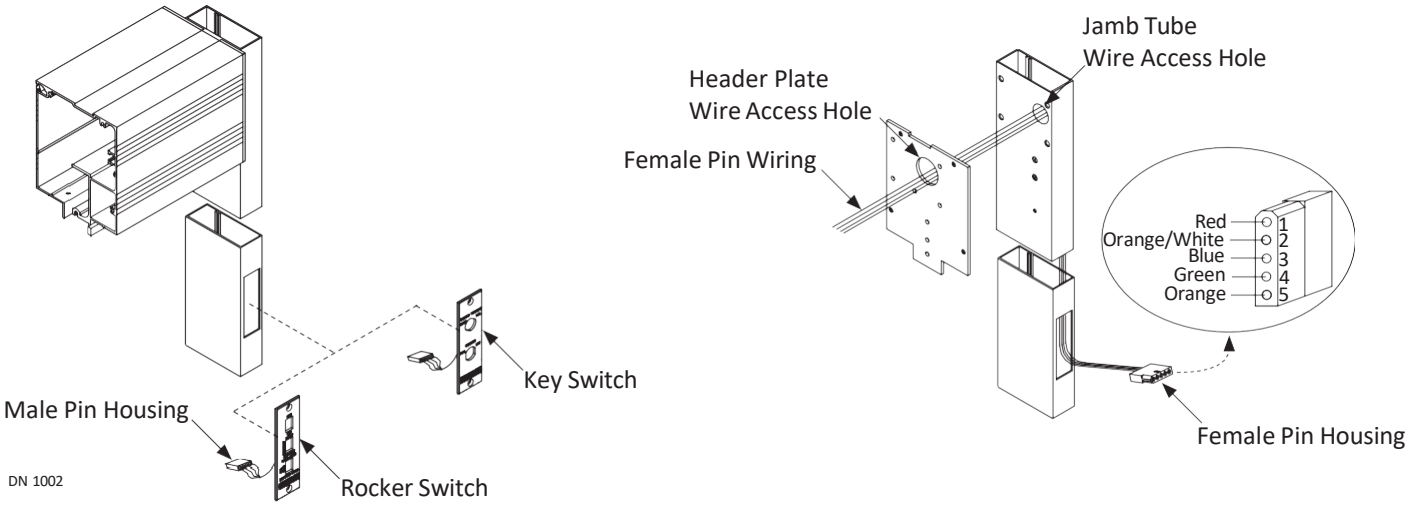

Figure 4 Wire the Switch Assembly

CHAPTER 9: INSTALL THE SURFACE THRESHOLD

The Surface Threshold is installed on the surface of the floor with ramps attached to both sides.

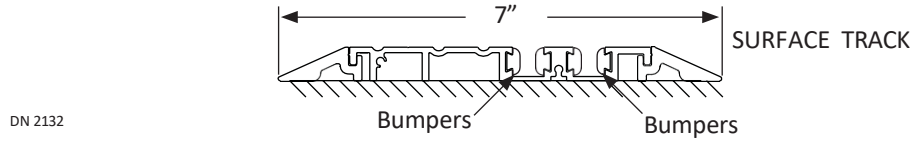

Figure 5 Surface Threshold

Attention: DO NOT permanently secure Threshold until Slide Door has been installed.

Attention: DO NOT center Threshold to Header. Failure to do so may cause misalignment.

1. On the same side of Door Frame where the Sidelite will be installed, snap a chalk line on the floor from Jamb to Jamb.

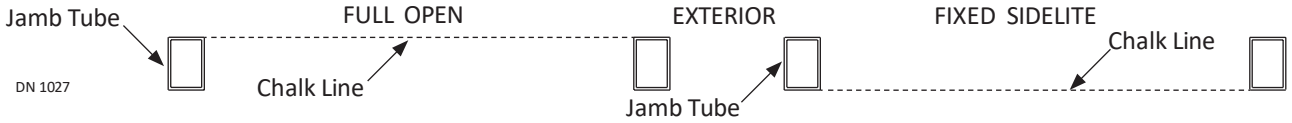

Figure 6 Snap Chalk Line

2. Go to the Header on the Sidelite Side of Door Frame.
3. Plumb the Floor Track by hanging the Plumb Bob from the Header (Sidelite Side). There should be a 1/8 inch overhang.

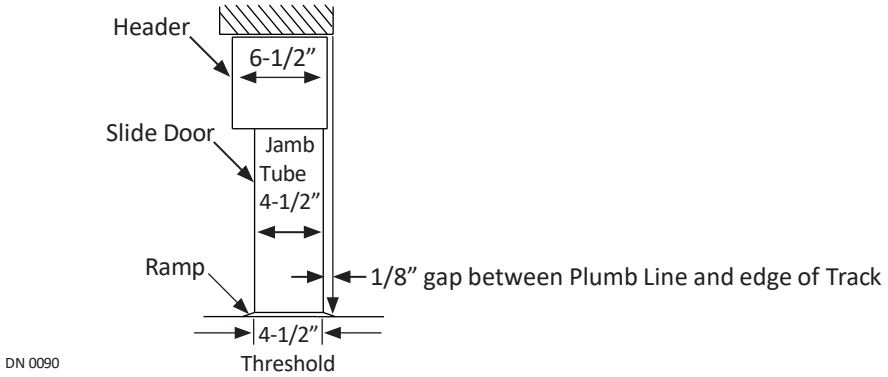

Figure 7 Plumb Line

SECTION 9.1: Full Open, Surface Threshold

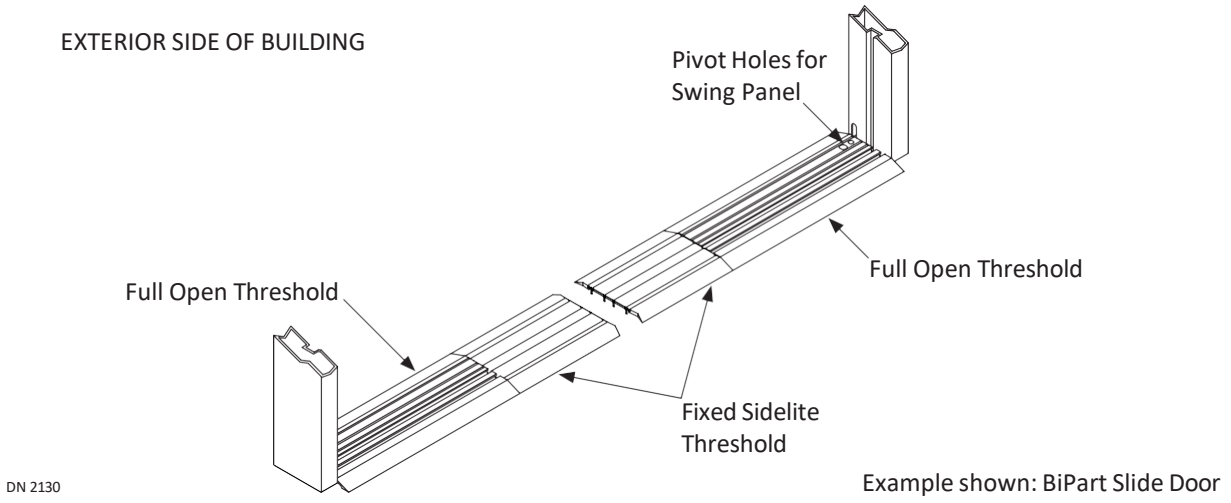

Figure 8 Install the Full Open, Surface Threshold

Attention: Lay down Threshold so the Channels are located on the side of Slide Door.

1. Obtain the Full Open Threshold.
2. With the Pivot Hole located on the Exterior Side of Building, center and then butt the Full Open Threshold to the Jamb Tube.
   a. Ensure the full length of Threshold is flush with the chalk line.
   b. Ensure Bumper Channels are on the same side of the Slide Door.
3. Obtain the Fixed Sidelite Threshold. Center the Fixed Sidelite Threshold to the Full Open Threshold. Butt together both ends of Thresholds. Ensure the full length of Thresholds are flush with the chalk line.
4. Apply caulking bead under Threshold. Install the full length of (1) Ramp on each side of Threshold
5. DO NOT permanently secure Threshold until Slide Door has been installed.

SECTION 9.2: Fixed Sidelite, Surface Threshold

1. Obtain the Fixed Sidelite, Surface Threshold.
2. Center the Threshold to both Jamb Tubes.
   a. Ensure the full length of Threshold is flush with the chalk line.
3. Apply caulking bead under Threshold. Install the full length of (1) Ramp on each side of Threshold
4. DO NOT permanently secure Threshold until Slide Door has been installed.

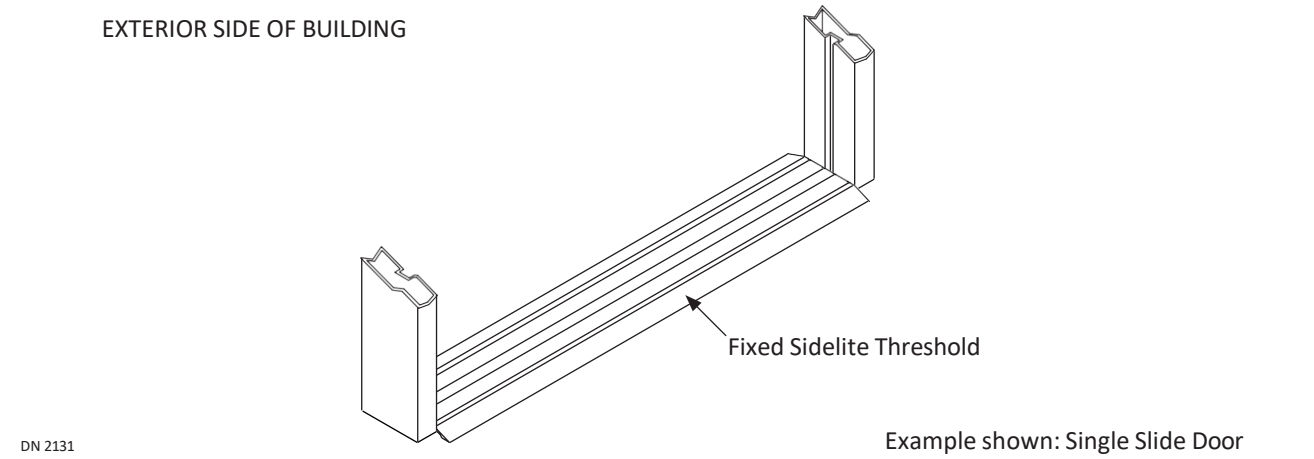

Figure 9 Install the Fixed Sidelite, Surface Threshold

CHAPTER 10: INSTALL THE RECESSED THRESHOLD

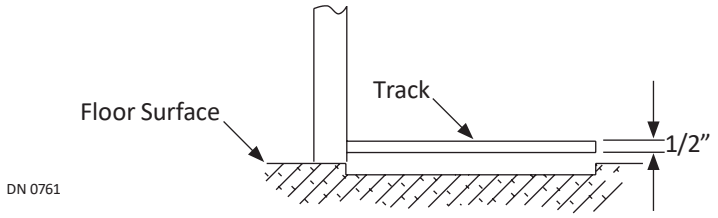

Figure 10 Track Recess

1. On both the Exterior and the Interior side of Door Frame, snap a chalk line on the floor from Jamb to Jamb.
2. Create a channel that is the full width of Jamb Tubes, and 1/2 inch deep.
3. Ensure the channel is plumb, square, and 1/2 inch deep throughout.
   a. Failure to do so may cause the Slide door to malfunction.

Figure 11 Snap Chalk Line

4. Center the following Threshold inside the channel so the full length is flush with the chalk lines:
   - Full Open Threshold
     1. With the Pivot Hole located on the Exterior Side of Building, center and then butt the Full Open Threshold to the Jamb Tube. Ensure Bumper Channels are on the same side of the Slide Door.
     2. Center the Sidelite Threshold to the Full Open Threshold. Butt together both ends of Thresholds.
   - Fixed Sidelite Threshold
     1. Center the Threshold to both Jamb Tubes.
2. DO NOT permanently secure Threshold until Slide Door has been installed.

CHAPTER 11: INSTALL THE FIXED SIDELITE

SECTION 11.1: Secure the Fixed Sidelite Panel to Door Frame

Figure 12 Fixed Sidelite has no Breakout Capabilities

1. Go to the Lead Stile on the Sidelite Panel. Locate the Cut Out at the Top.
2. Locate (1) Mounting Bracket that was pre-installed under the Bottom Lip of Header.
3. Lift and then angle the Fixed Sidelite until the Mounting Bracket is seated inside the Cut Out.

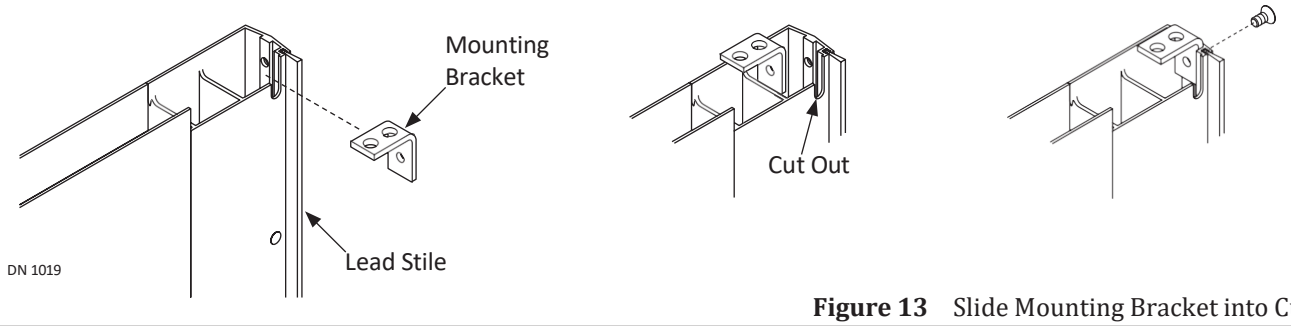

Figure 13 Slide Mounting Bracket into Cut Out

4. Move the Fixed Sidelite forward so the Pivot Stile does not scrape up against the (3) Mounting Brackets that were pre-installed on the Pivot Jamb Tube. There is room inside the Lead Stile for the Mounting Bracket to move around within.

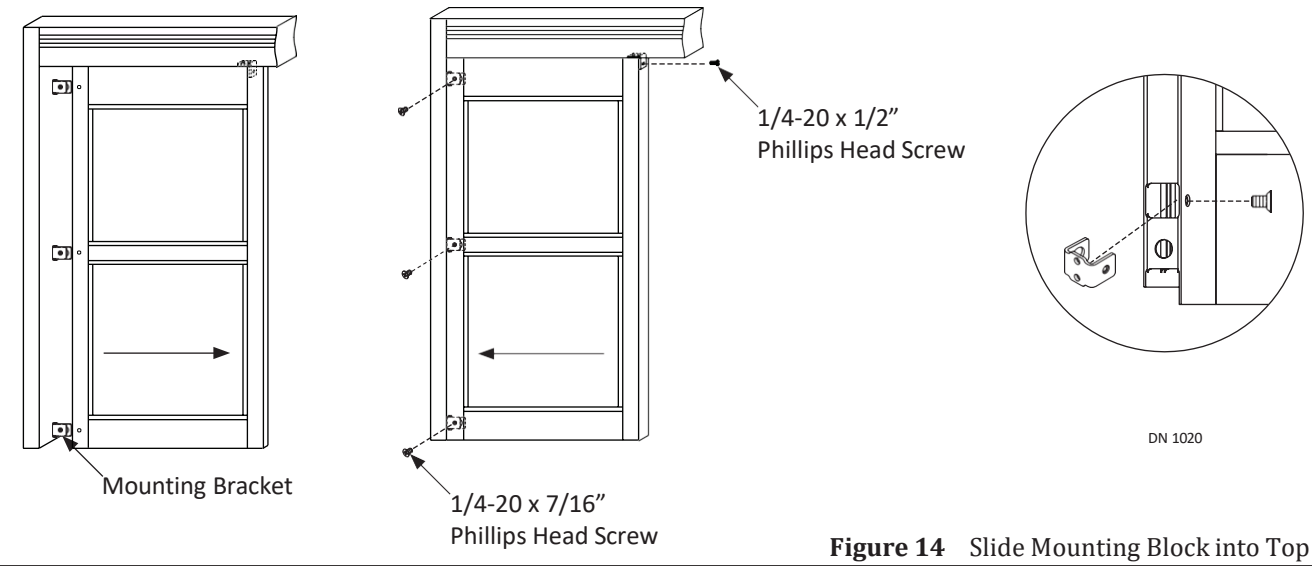

Figure 14 Slide Mounting Block into Top Rail

5. Locate (3) Cut Outs on the side of the Pivot Jamb Tube.
6. Align and then slide the Fixed Sidelite until (3) Mounting Brackets are seated inside each Cut Out.
7. Continue to slide the Fixed Sidelite towards the Interior of the Building until both Mounting Brackets butt up against the inside wall of the Pivot Stile.
8. Align all (4) Mounting Bracket screw holes with the Pivot Stile screw holes and the Lead Stile screw hole.
9. Secure (3) Mounting Brackets located on the Pivot Jamb Tube to the Fixed Sidelite with (3) 1/4-20 x 7/16 inch Phillips Head screws.
10. Secure (1) Mounting Bracket located under the Bottom Lip of Header with (1) 1/4-20 x 1/2 inch Flat Head Screw.

SECTION 11.2: Install the Double Roller Assembly

1. Go to the bottom of Lead Stile. Remove the Cover Plate and (2) pre-installed 1/4-20 x 5/8 inch Socket Head Screws.
   a. A Nut Plate is pre-installed onto the back face of the Lead Plate directly behind where the Cover Plate is located. Do Not remove the Nut Plate.

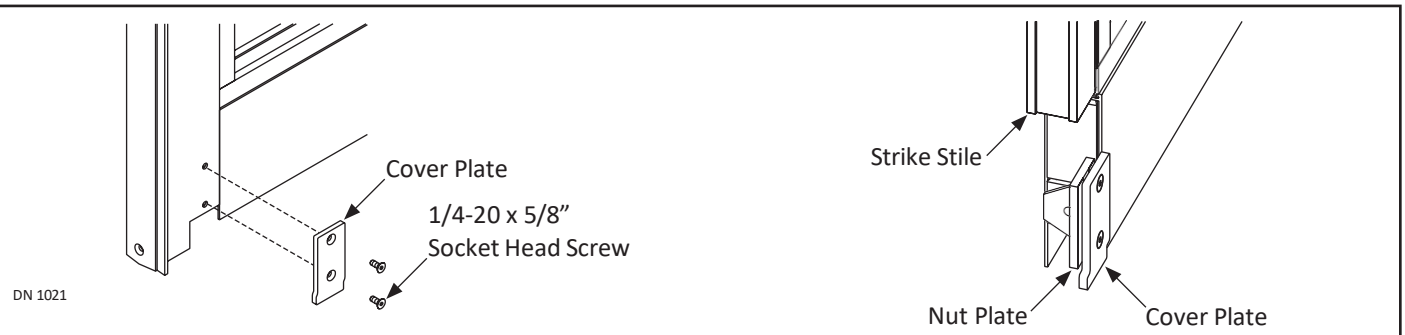

Figure 15 Remove Cover Plate

2. Obtain the Double Roller Assembly.
   a. For Bi-Part Slide doors a Left Hand and a Right Hand Double Roller Assembly will be provided. Be sure to select the Double Roller that corresponds to the right side or the left side of door.
3. Install the Double Roller by sliding (2) rollers into the Bottom rail so the bracket sticks out from underneath in direction of where the Slide door is to be installed.
   a. Push rollers back into Bottom Rail so the Floor Bracket can be installed.
   b. Do not install Slide Door onto Bottom Guide Assembly at this time.

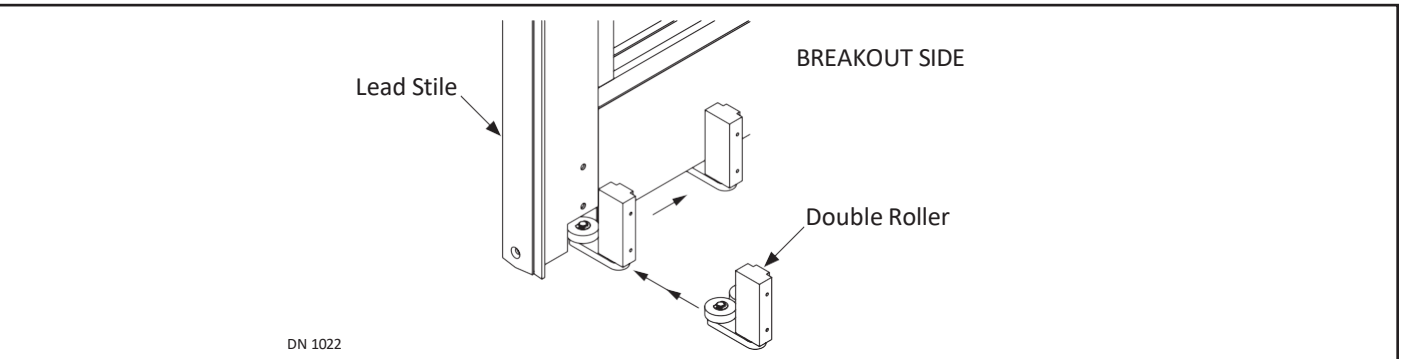

Figure 16 Slide Bottom Guide Assembly into Bottom Rail

SECTION 11.3: Install the Floor Bracket

1. Insert the Threshold Bracket into the Bottom Rail so the plate portion with (2) screw holes sticks out from underneath in direction of where the Slide door is to be installed.
2. Ensure the Fixed Panel is still parallel to the chalk line so it remains square.
3. Secure the Threshold Bracket to the Lead Stile with (1) 1/4-20 x .5 inch Phillips Head screw.
4. Secure the Cover Plate back onto the Lead Stile with (2) 1/4-20 x .625 inch Socket Head screws.

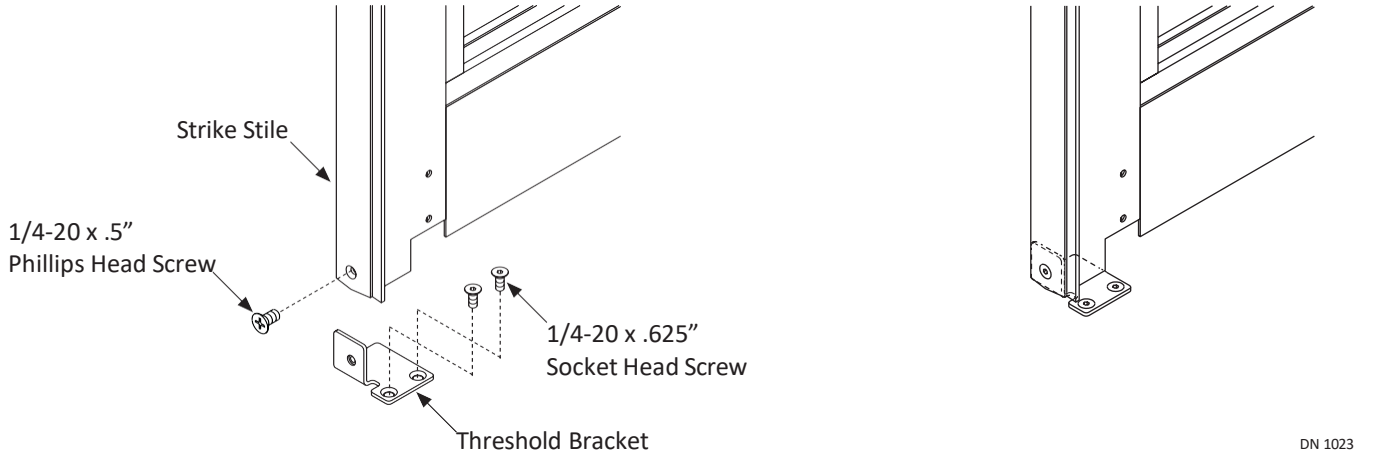

Figure 17 Install the Threshold Bracket

CHAPTER 12: INSTALL THE FULL OPEN SIDELITE

Figure 18 Sidelite and Slide Door have Breakout Capabilities

SECTION 12.1: Install the Limit Arm

1. Obtain (1) Limit Arm, (1) Washer, and (1) 1/4-20 x 1 inch Phillips Head screw.
2. Flip the Limit Arm so the Roller Guide is facing down, towards the Top Rail of Swing Sidelite.
3. Insert (1) 1/4-20 x 1 inch Phillips Head screw through the bottom of the Limit Arm (so the pointed end is facing up towards the Header).
4. Slide (1) Washer onto the exposed end of the 1/4-20 x 1 inch Phillips Head screw.
5. Go to the pre-drilled screw hole located at the bottom of Header (approximately 6 inches from the Pivot end).
6. Insert the 1/4-20 x 1 inch Phillips Head screw into the screw hole. Loosely tighten (just enough to keep the assembly from falling out of the screw hole).
   a. Limit Arm installation is completed after the Swing Sidelite is attached to both Pivots.

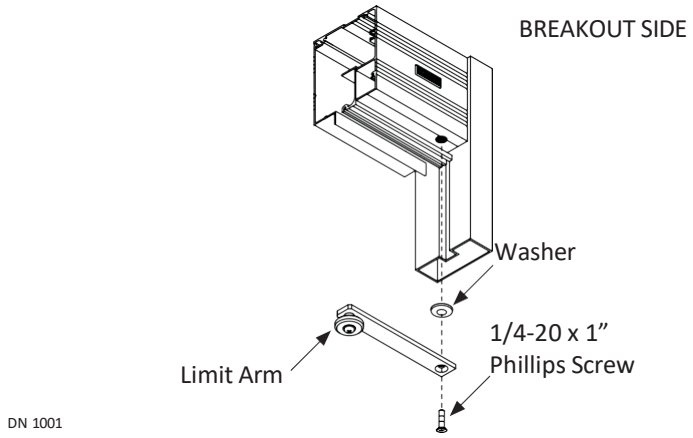

Figure 19 Install the Limit Arm

SECTION 12.2: Attach the Swing Sidelite to Pivots

1. Go underneath the Pivot Stile. Insert the Bottom Pivot into the Floor Pivot Barrel.

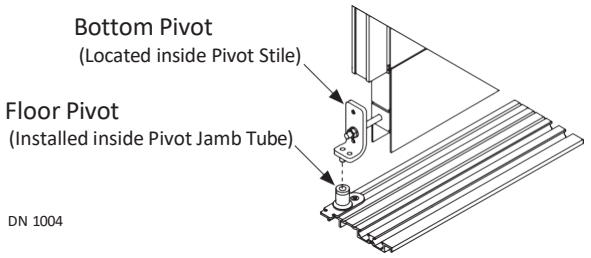

Figure 20 Insert Bottom Pivot into Floor Pivot Barrel

2. Go to the Top of the Pivot Stile. Locate the Top Pivot.
3. Push the Top Pivot down by pressing on the Spring Pin.
4. Align the Top Pivot with the Pivot Hole located at the bottom of Header.
5. Release the Spring Pin to allow the Top Pivot to snap up into the hole.
   a. Ensure the Top Pivot fully engages the hole.
   b. If necessary, use a flathead screwdriver to lift up on the Spring pin until the Pivot Pin is fully seated in the hole.
   c. Ensure not to pinch Cable Wiring.

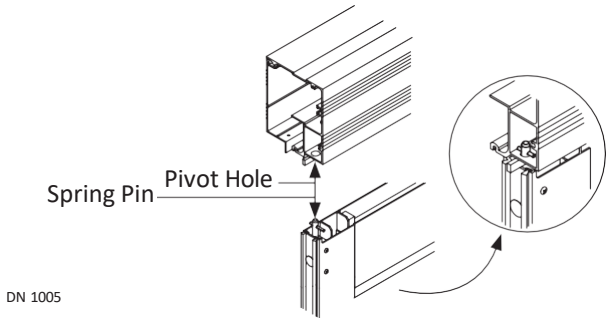

Figure 21 Insert Top Pivot into Header

SECTION 12.3: Complete Installation of the Limit Arm

1. Open the Swing Sidelite out to 90 degrees. Align the Limit Arm with the Top Rail.
2. Rest the Wheel of the Limit Arm inside the Top Rail.
3. Open the Swing Sidelite all the way.
4. Tighten the (1) 1/4-20 x 1 inch Phillips Head screw. Do not overtighten.
5. Test the Swing Sidelite to ensure it opens and closes properly.
   a. Tighten and/or untighten the (1) 1/4-20 x 1 inch Phillips Head screw as necessary.

SECTION 12.4: Adjust the Ball Detents

Note: Breakout resistance for Ball Detents must meet ANSI Standard A156.10 or Local Codes.

1. Go to the top of the Strike Stile. With a 15/16 inch Open End wrench, loosen the Nut to raise or lower the Ball Detent so it has light contact with the Bottom of Header.
2. Open and close the Swing Door several times to score the surface on the Bottom of Header locate and mark where the Score intersects the center groove.
3. With a 1/4 inch drill bit, drill a screw hole through the Bottom of Header. Countersink the screw hole 3/8 inch x 82°.
4. Go to the bottom of the Strike Stile. With a 15/16 inch Open End wrench, loosen the Nut to raise or lower the Ball Detent so it has light contact with the Threshold.
5. Open and close the Swing Door several times to score the surface on the Threshold. Locate and mark where the Score intersects the center groove.

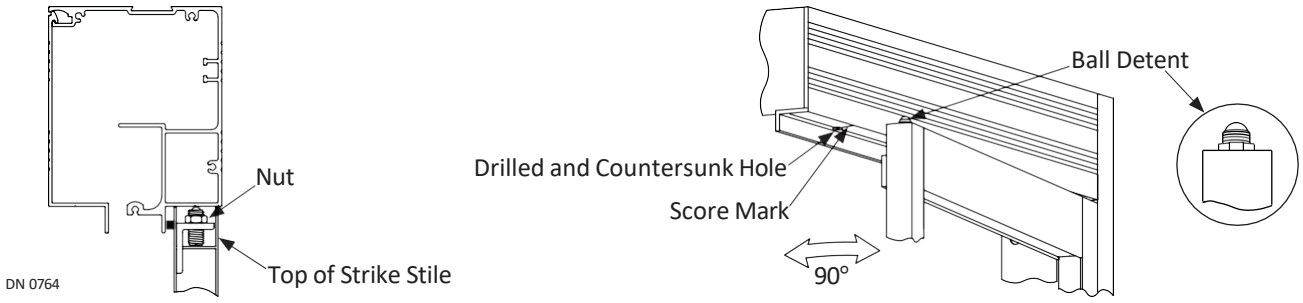

Figure 22 Adjust the Ball Detent on top of Strike Stile

6. With a 1/4 inch diameter drill bit, drill a hole through the Threshold (Just deep enough for the Ball Detent to fit within). Countersink the screw hole to be 1/4 inch x 82 inches.
7. Close and then break open the Swing door to test fit for both Ball Detents.
   a. To adjust the fit, increase the size of the hole and countersink.
   b. Do Not over-drill the hole. If hole is over drilled the Threshold will need to be replaced.
   c. For additional travel remove the Ball Detent Bracket to lower or raise the Ball Detent.

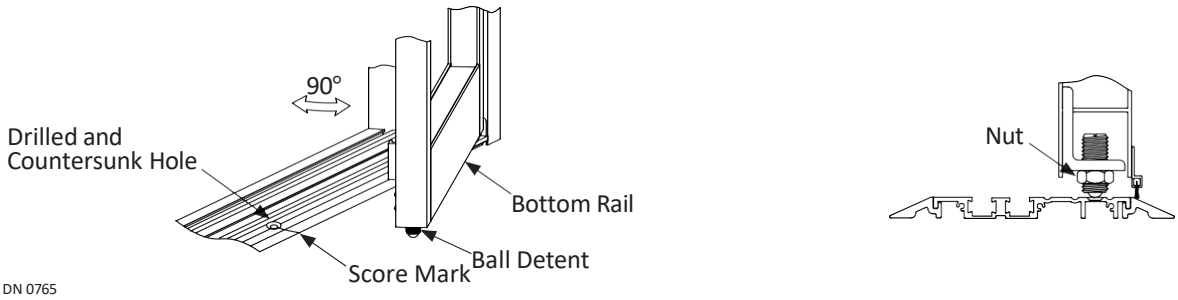

Figure 23 Adjust the Ball Detent on bottom of Strike Stile

CHAPTER 13: INSTALL THE SLIDE DOOR

Attention: Installation of the Slide Door is the same for the Fixed Slide door, or the Full Open Slide door.

SECTION 13.1: Lift Carrier onto the Track

1. If glass is already installed, cover the Sidelite Panel with cardboard on the Non-Breakout side.
2. Go to the top of Carrier. Loosen (1) Nut on each Roller by inserting (1) 7/32 inch Allen wrench into the exposed end of a Roller Axle. Hold the 7/32 inch Allen wrench in place to keep the Roller Axle stationary. At the same time, loosen (1) 7/16-20 Whizlock nut with a 15/16 inch Open End Wrench.

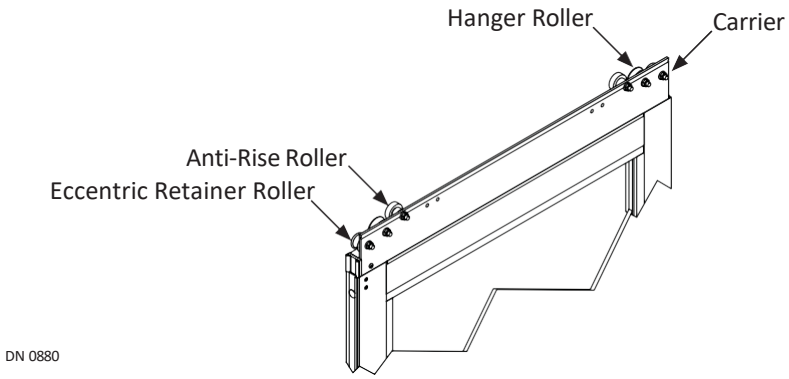

Figure 24 Carrier with Rollers

3. Lift and then slightly tilt the Slide door to make it easier for the (6) Rollers to “catch” onto the Track.

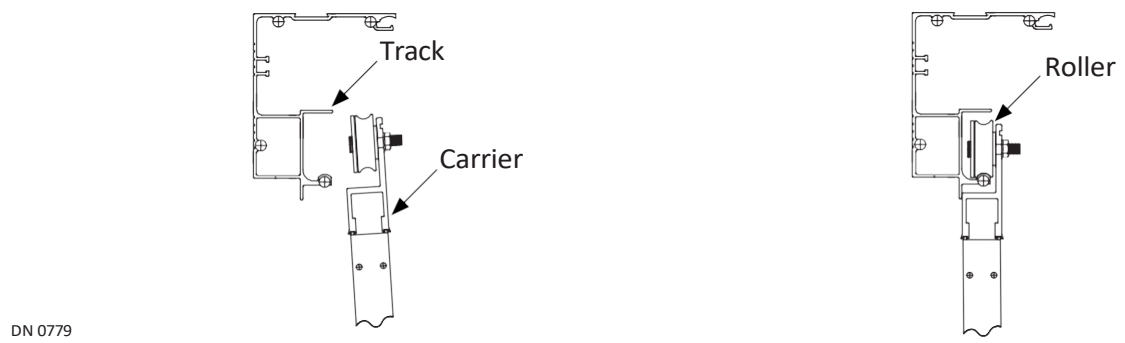

Figure 25 Install Carrier onto Track

13.1.1. Secure Belt Clip to Carrier

1. Go to the Lead Side of Carrier. Line up (2) screw holes located on the Carrier with (2) screw holes located at the bottom of the Belt Clip bracket.
2. Secure the Belt Clip to the Carrier with (2) 1/4-20 x 3/4 inch screws provided by NABCO.

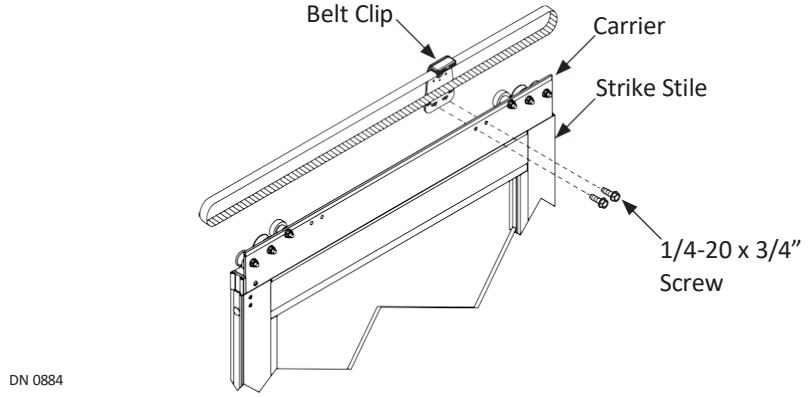

Figure 26 Secure Belt Clip to Carrier

SECTION 13.2: Insert Bottom Guide into Threshold (Full Open Slide Door)

1. Locate the Bottom Guide that was pre-installed inside the Pivot Stile located on the Slide Door.
2. Lift up the Prongs until the Bottom Guide is directly above the Guide Channels. Drop the Prongs into the Guide Channels.

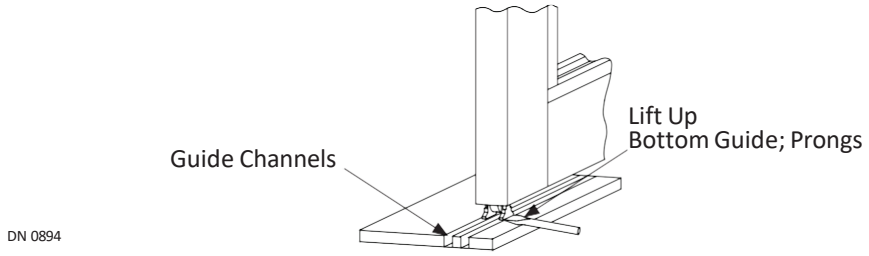

Figure 27 Drop Prongs into Channel Guides

SECTION 13.3: Secure Bottom Guide to the Fixed Slide Door

1. Go to the Bottom Rail on the Fixed Sidelite. Locate the Bracket that should be sticking out from underneath.
2. Slide the Pivot Stile (on Slide Door) onto the Bracket.
3. Support the weight of the Fixed Sidelite. Breakout the Slide door to Full Open position.
4. Secure the Bracket to the Pivot Stile with (2) 1/4 - 20 x 3/4 inch Whiz-Lock screws

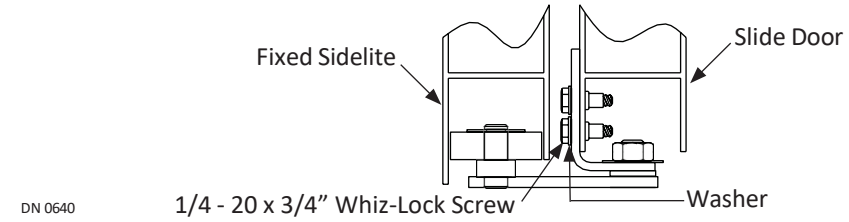

Figure 28 Install Sliding door to Bottom Guide

CHAPTER 14: FINISH INSTALLING THE SURFACE THRESHOLD

SECTION 14.1: Anchor Placements

Note: The following certification documents can also be found online at: www.nabcoentrances.com

For detailed anchoring information, please refer to the certification documents that have been packed with this manual:

- Level D Impact (20-1106.04) ● Non-Impact (20-1106.03) ● Level E (FL39894 Installation Instructions)

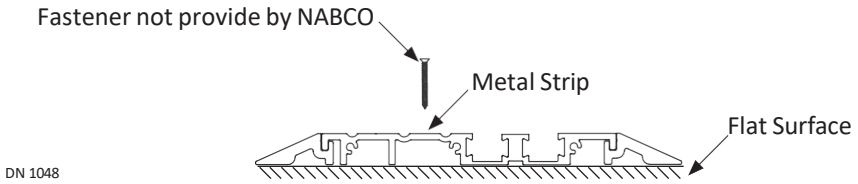

Figure 29 Secure Threshold to Flat Surface

SECTION 14.2: Threshold Maintenance

1. Check for wear of Bottom Guide Roller and Bumpers inserted within Threshold Channels. Listen for squeaking/grinding noise.
2. Look for dirt/debris/excessive build-up. If dirt/debris/excessive build-up is found.
   1. Vacuum to remove loose material.
   2. Wipe off the Threshold.
   3. Use (1) slotted Screw Driver to remove dirt/debris and/or excessive build–up located within Threshold Channels.
3. Inspect weekly and daily during winter as snow and ice can build up.

CHAPTER 15: 110 VAC GENERAL WIRING

WARNING **Shut the installation site Circuit Breaker OFF. Failure to do so may result in serious personal or fatal injury. When uncertain whether power supply is disconnected, always verify using a voltmeter.**

DANGER **Read and understand the "Opus Control Wiring and Programming Manual" P/N C-00391 before attempting to powerup the GT1175 Slide Door. Failure to do so may result in damage to the Slide door and/or injury to the installer and will nullify all warranties.**

CAUTION **Permanent wiring shall be installed as required by local codes.**

CAUTION **Electrical circuit to Nabco operator must not be not shared with other equipment such as lighting, cash registers, or any device that might cause electrical interference on the circuit.**

CAUTION **Keep all incoming 120 VAC wiring separate from low voltage wiring within Header. Do not route 120 VAC wires near the U30 Microprocessor Control and Motor/Operator.**

Attention: Insert all Incoming 120 VAC Power wires into the pre drilled Electric Service Access Hole located at the left or right side of Header End Cap. It is recommended to house all wires into an Electrical Conduit.

Attention: Any non-factory low voltage wiring added inside the Header must be Type CL2 wire or the equivalent in accordance with Article 725 of the NEC.

Notice: Wiring must meet all local, state, federal or other governing agency codes.

Note: Determine correct supply voltage is 115 VAC ± 10%.

Note: Ensure the Slide door system is Grounded for safe and consistent operation.

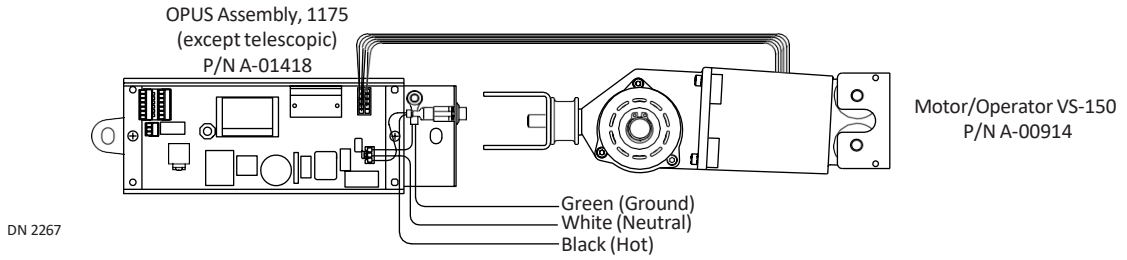

CHAPTER 16: GLAZING

CAUTION **Use caution when moving and installing the glass panels. These panels are constructed with tempered glass. Any sharp objects that come in contact with the glass may cause the glass to craze. NABCO Entrances, Inc. is not responsible for broken glass.**

Attention: Per Chapter 24 of the International Building Code (IBC), all glass must comply with ANSI Standard Z97.1 (Glass and Settings Blocks are not provided by NABCO).

SECTION 16.1: Door Panel Setting Blocks

Note: Place Setting Blocks in the designated marked spots, only. Cross-Blocking helps direct glass weight away from the strike edge of the door, to prevent sagging and possibly dragging on the floor or threshold.

1. Ensure the Base Glass Stop (Pre-installed at the NABCO Factory) is free of debris and/or sharp objects.
2. Go to the STRIKE side of panel at the TOP.
   1. Measure (6) inches across from the Strike End of Top Rail, towards the Pivot Stile. Mark that spot.
   2. Measure (6) inches down from the Strike End of Top Rail towards the Bottom Rail. Mark that spot.
3. Go to the PIVOT side of panel at the BOTTOM.
   1. Measure (6) inches across from the Pivot End of Bottom Rail, towards the Strike Stile. Mark that spot.
   2. Measure (6) inches up from the Pivot End of Bottom Rail, towards the Top Rail. Mark that spot.
4. For each marked spot, place (1) Setting Block (not provided by NABCO) on top of the Base Glass Stops.
5. Place the Glass Panel on top of the Setting Blocks and up against the Vinyl.
6. Shift the Glass Panel until it is square. Secure the Glass Panel with Snap-In Glass Stops.
7. To raise the Door Panel for Door Panels that are not square or sag at the lead edge, increase the thickness of a Setting Block (not provided by NABCO).

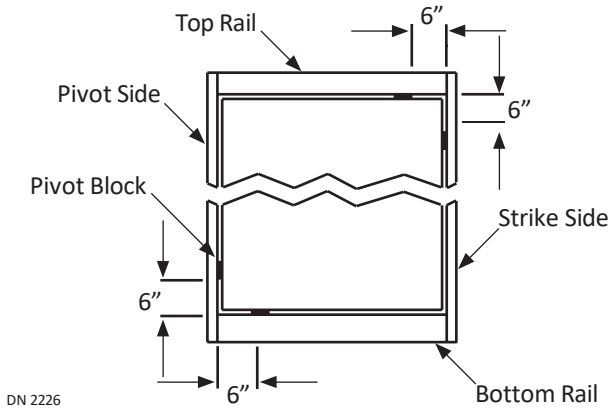

NOTE:
If Door Panel is not square or sags, increase the thickness of the Top Setting Block to raise Door Panel.

Figure 30 Install Glazing Blocks

SECTION 16.2: Glass Stops for H105 (Non-Impact)

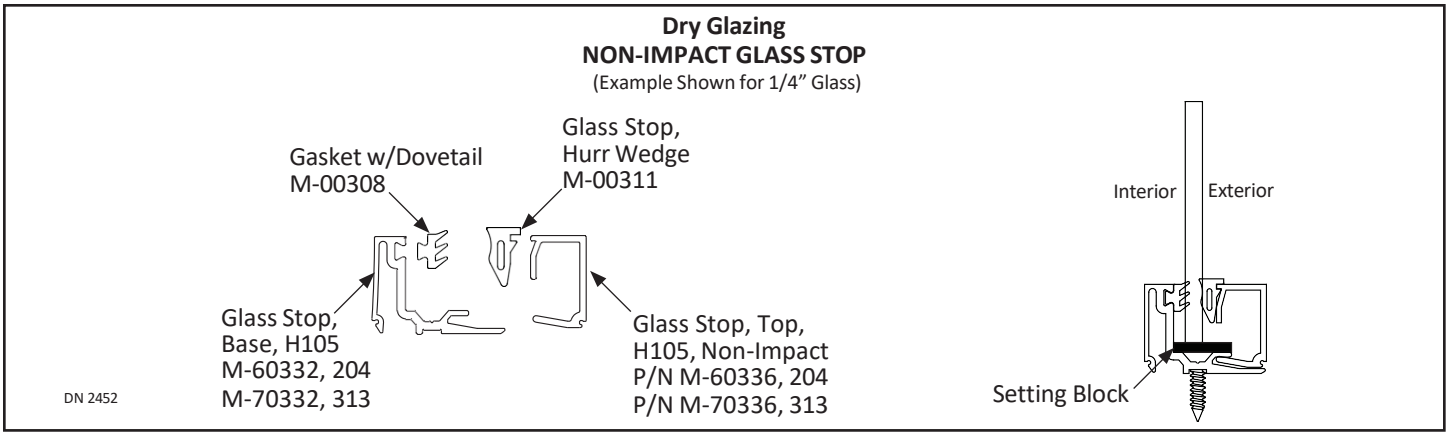

SECTION 16.3: Glass Stops for H105 Level D (Impact)

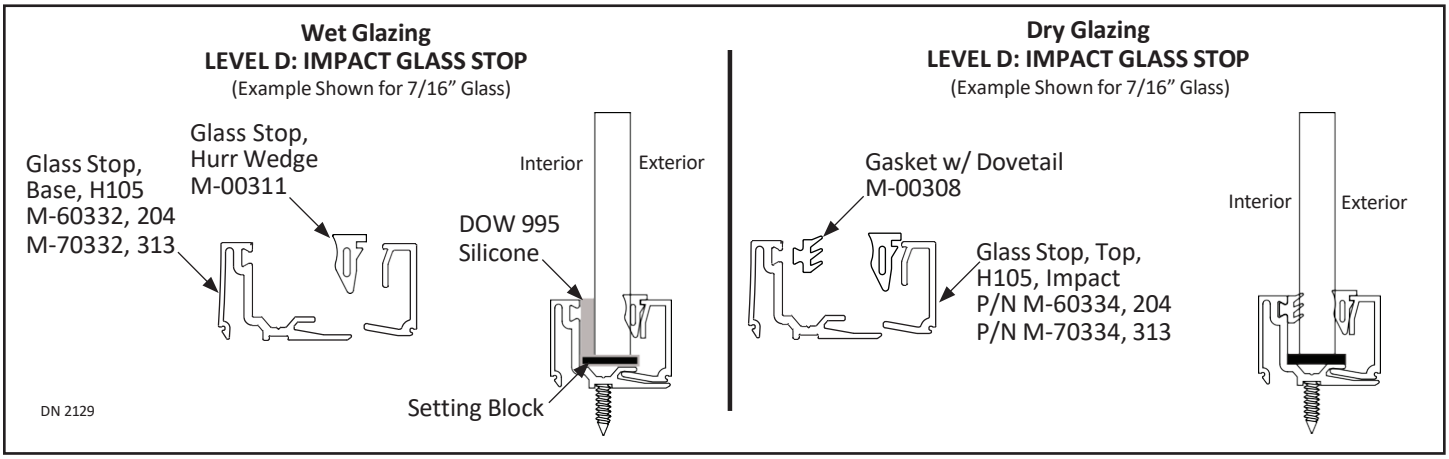

SECTION 16.4: Glass Stops for H105 Level E (Impact)

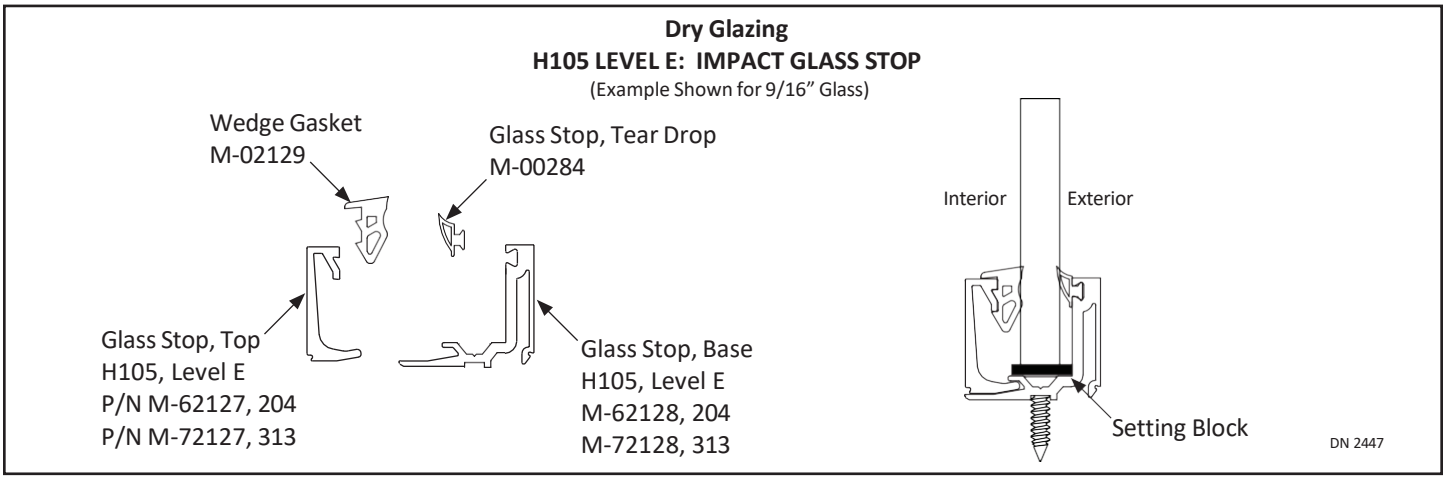

CHAPTER 17: ADJUSTMENTS

SECTION 17.1: Adjust Rollers on Carrier

CAUTION **Do Not rotate the Roller Axle counter-clockwise. Doing so will unthread the Axle.**

1. To loosen a Roller, insert a 7/32 inch Allen wrench into the exposed end of a Roller Axle.
2. Hold the 7/32 inch Allen wrench in place to keep the Roller Axle stationary. At the same time, loosen (1) 7/16-20 Whizlock nut with a 15/16 inch Open End Wrench.

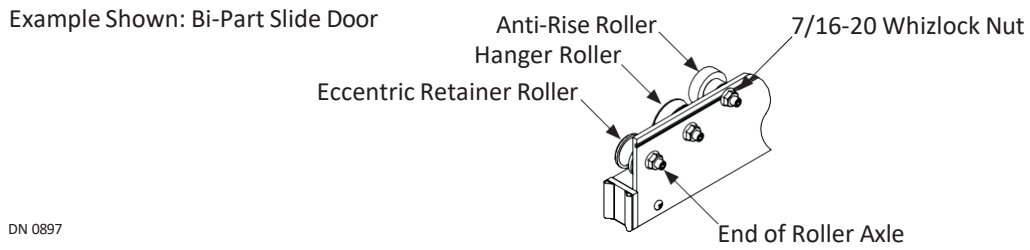

Figure 31 Loosen Carrier Rollers

SECTION 17.2: Hanger Rollers

Hanger Rollers are used to evenly distribute weight of the Slide door, and/or adjust the height, and/or adjust the Leading edge of the Slide door at the top and bottom so it is parallel to another Slide Door (Bi-Part), or the Lead Jamb Tube (Single), and the Header.

1. Loosen (2) Hanger Rollers located between the Anti-Rise Roller and the Eccentric Carrier Roller.
2. Raise or lower the Slide door by turning the Axle on the Hanger Roller clockwise with a 15/16 inch Open End Wrench.
   a. The appropriate gap between the Bottom Rail and floor is between 11/16 inch to 15/16 inch; with the nominal gap being 7/8 inch.
3. Ensure the Leading Edge: of Slide door and other Slide door or Jamb Tube are parallel; and Slide door and Header are parallel.
4. Retighten the 7/16-20 Whizlock nuts. Do not overtighten.

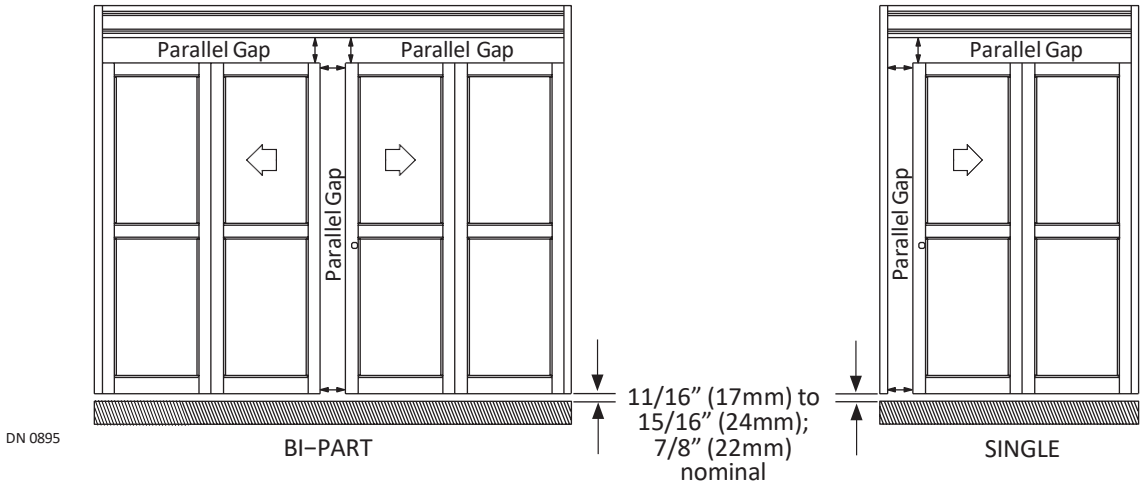

Figure 32 Floor Gap

SECTION 17.3: Anti-Rise Rollers

CAUTION **Ensure (1) Anti-Rise Bracket is aligned directly above each Anti-Rise Roller.**

1. Fully close Slide Door. Ensure each Anti-Rise Bracket is aligned directly above each Anti-Rise Roller. If not, go to the Anti-Rise Bracket and loosen (1) 3/8-16 Whizlock Nut with a 9/16 inch wrench.
2. Slide the Anti-Rise Bracket to the left or right. Retighten screws. Do not overtighten.

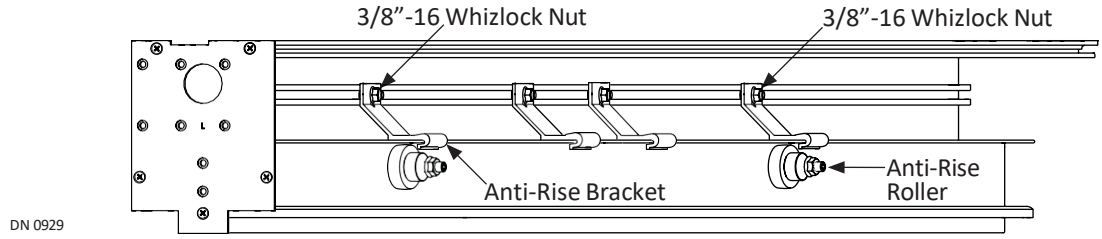

Figure 33 Align Anti-Rise Brackets to Anti-Rise Rollers

3. Loosen (2) Anti-Rise Rollers located towards the middle of the Carrier.
4. Turn the Axle clockwise until there is a 1/64 inch to 1/32 inch gap between the Roller Wheel and the Top Track.
   a. Gap should be about the same thickness of a credit card.
5. Retighten the 7/16-20 Whizlock nuts. Do not overtighten.

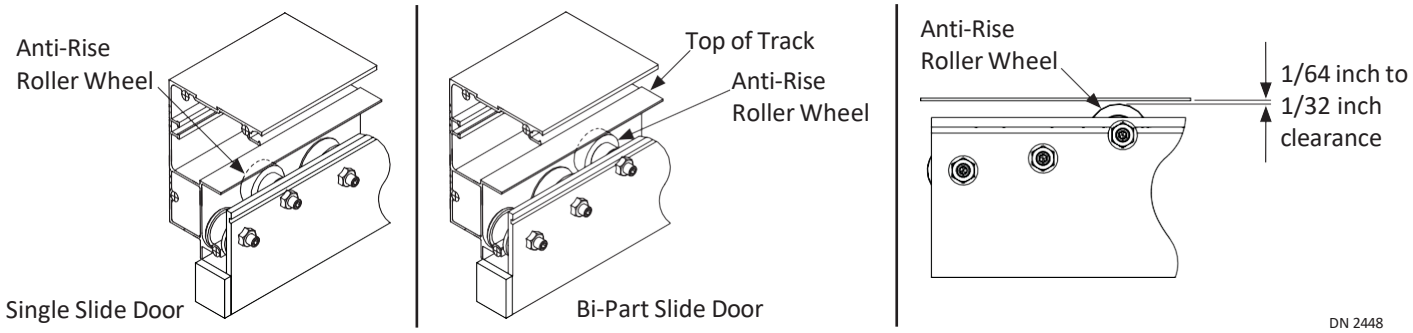

Figure 34 Clearance between Anti-Rise Roller and Track

SECTION 17.4: Eccentric Retainer Rollers

1. Loosen (2) Eccentric Retainer Rollers located at the edge of Carrier.
2. Turn the Axle clockwise until there is a 1/64 inch to 1/32 inch gap between the Roller Wheel and the Bottom Track.
3. Gap should be about the same thickness of a credit card.

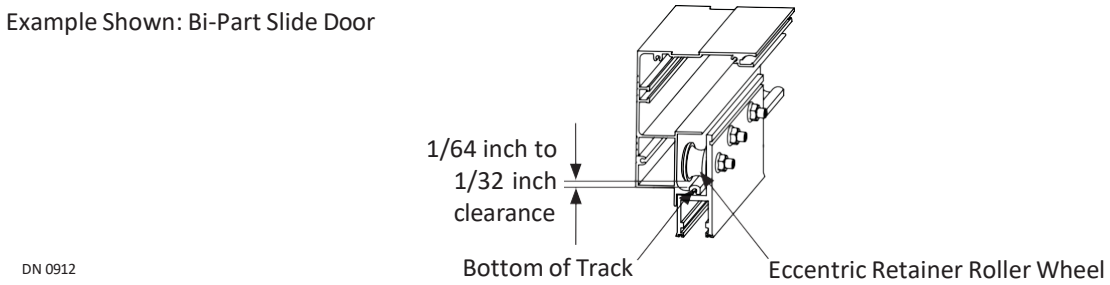

Figure 35 Clearance between Eccentric Retainer Roller Wheel and Track

SECTION 17.5: Adjust the Interlock

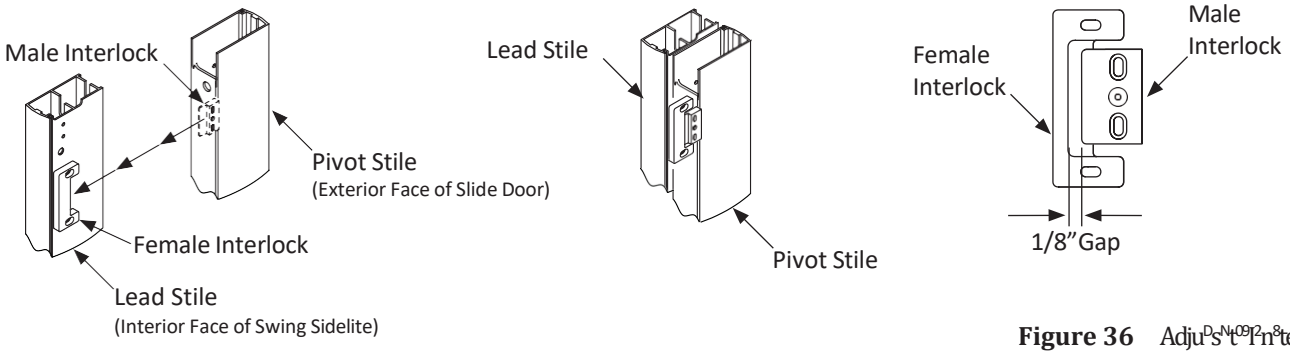

Figure 36 Adjust Interlock

1. Manually close the Slide Door. Ensure there is approximately 1/8 inch gap between the Male Interlock and Female Interlock.
   a. The Slide door will not operate properly if the gap is less than 1/8 inch.
2. Loosen mounting screws to adjust one or both Interlocks.
3. Retighten Mounting screws once gap is appropriate width.

SECTION 17.6: Adjust Pressure of the Bottom Panic Catch

1. Breakout the Slide door. Go inside the Top Rail (closest to the Lead Stile). Remove the Panic Catch.

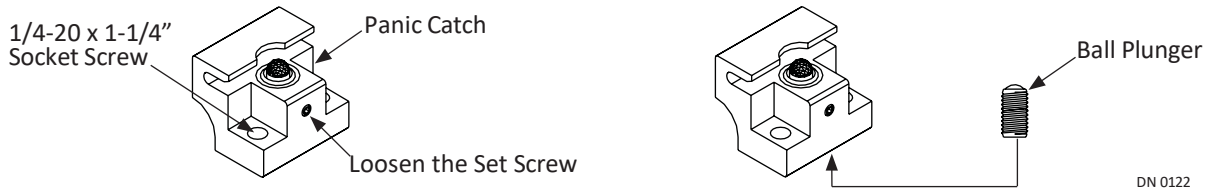

Figure 37 Panic Adjustment

2. Loosen the Set screw that is located in front of the Panic Catch.
3. Go underneath the Panic Catch. Raise or lower the Ball Plunger to adjust the engagement.
   a. The Ball Plunger must be adjusted for proper breakout resistance to meet ANSI A156.10 code and/or local code.
   b. Use minimal engagement if Panic Hardware is used.
4. Tighten the Set screw. Secure the Panic Catch Release inside the Carrier with (2) 1/4-20 x 1-1/4 inch Socket Head screws.

SECTION 17.7: Adjust Preload

Attention: Glass must be installed first before adjusting Preload on Slide Door.

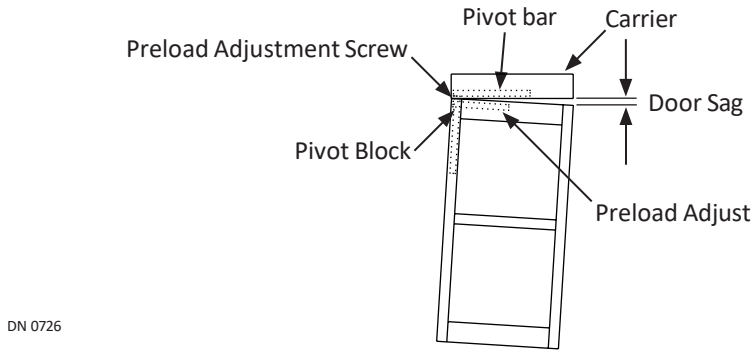

Figure 38 Check Door Sag

1. Support the weight of Slide door.
2. Breakout the Slide door approximately 5 degrees (just enough to expose the Preload Adjustment Screw). Check for door sag.

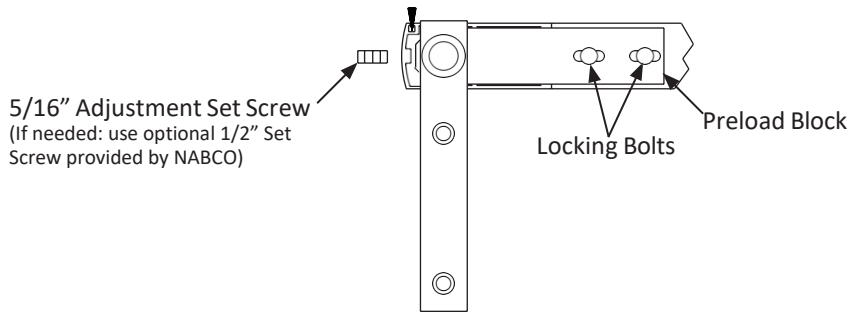

Figure 39 Adjust the Preload

3. Go to the Preload Block located inside Top Rail. Loosen (2) Locking Bolts.

4. Go to the back edge of Pivot Stile. Reduce Door sag by tightening the 5/16 inch Adjustment Set Screw with an 5/32 inch Allen Wrench.
   a. The Door should latch without having to be manually lifted.
   b. Do Not allow the Adjusting Set Screw to protrude more than 5/32 inch past the end of stile.
   c. If deemed necessary: an optional 1/2 inch Set Screw has been provided by NABCO.

SECTION 17.8: Correct Preload Misalignment

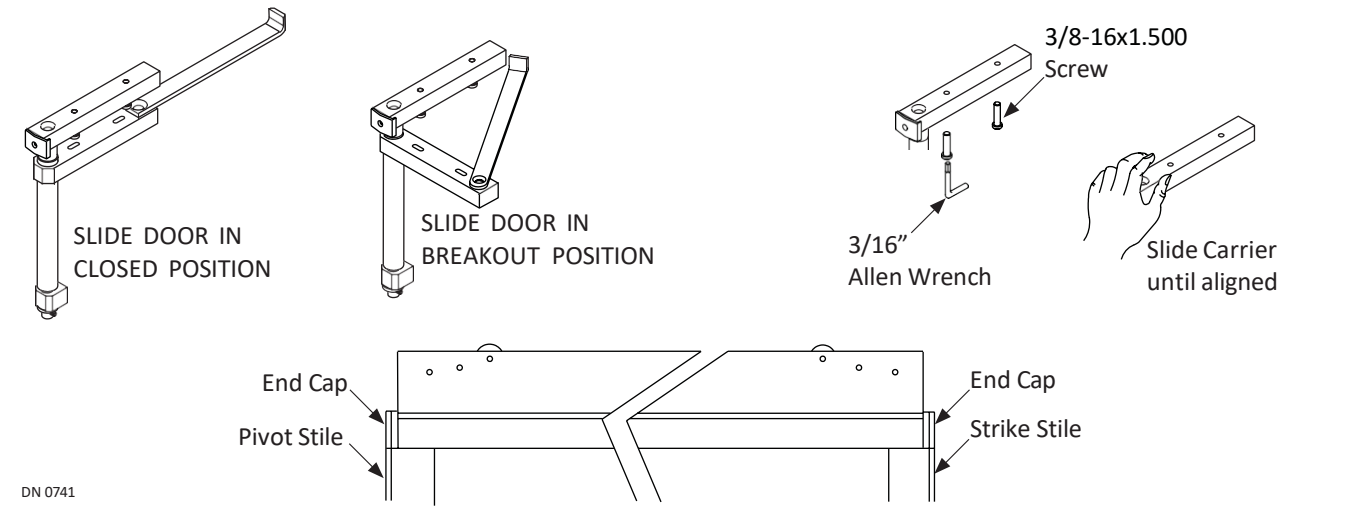

Figure 40 Correct Preload Misalignment

1. Breakout the Slide Door. Go to the top of Pivot Stile. Loosen the 5/16-24 x 1/2 inch Set Screw.
2. Go inside the Top Rail. Loosen (2) 1/4-20 x 1-3/4 inch Hex Screws used to secure the Preload Block to the Top Rail.
3. Slide the Pivot Carrier back or forth until the Endcap is aligned with the Pivot Stile.
4. Fully close the Slide Door to ensure the Preload is aligned. Retighten the Hex Screws.

CHAPTER 18: INSTALL WEATHERING

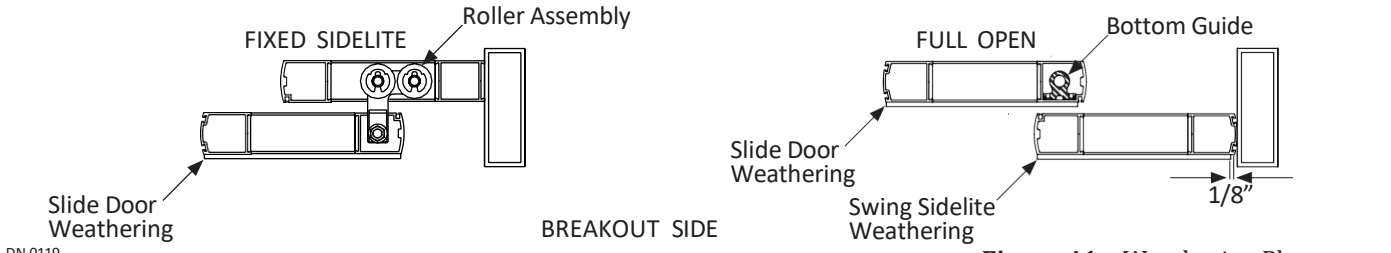

Figure 41 Weathering Placement

SECTION 18.1: Fixed Sidelite Slide Door

1. Secure Brush Holder to Bottom Rail of Slide door with #6 x 1/2 inch self tapping screws.

SECTION 18.2: Full Open

1. Secure Brush Holder to Bottom Rail of Swing Sidelite with #6 x 1/2 inch self tapping screws.
2. Breakout the Swing Sidelite. Secure Brush Holder to Bottom Rail of Slide door with #6 x 1/2 inch self tapping screws.

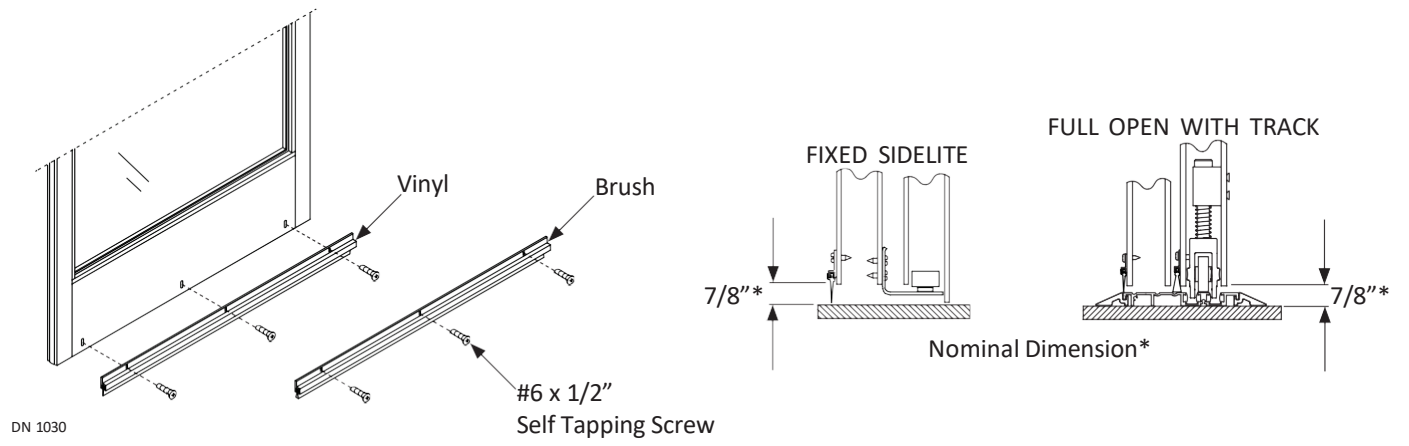

Figure 42 Secure Weathering

SECTION 18.3: Apply Caulking Bead

1. Ensure the entire Door Frame is properly secured to the Rough Opening.
2. Apply caulking bead between the Door Frame and Rough Opening (inside and outside).

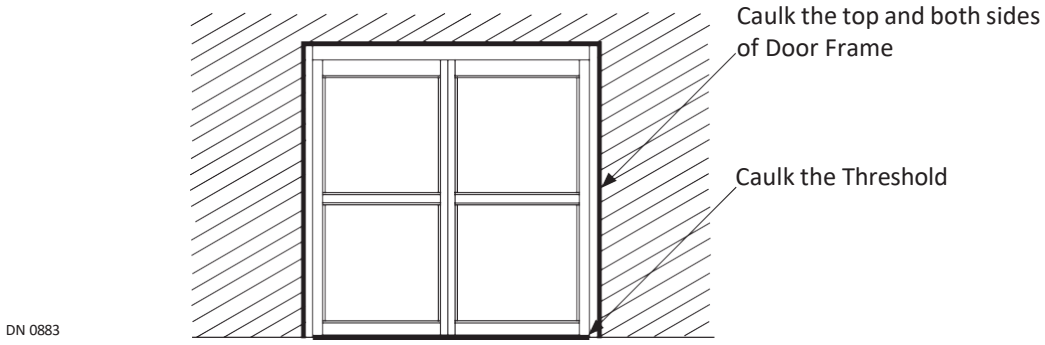

Figure 43 Caulk Position

CHAPTER 19: SLIDE DOOR SAFETY CHECK

1. Ensure the Circuit Breaker is switched ON. Do not switch Circuit Breaker ON and OFF too quickly.
2. Ensure all other hardware and/or components are properly secured.
3. Ensure Header Cover has been replaced and properly secured.
4. Ensure the Rocker Switch or Key Switch is set to “ON”.
5. Check the motion of the Slide door. Slide door should slide freely.
6. Ensure Full Open Sidelite doors are fully closed. Failure to do so, will disrupt proper door operation
7. Check for proper door operation.
8. Test Breakout.
9. Ensure that doors, header, and frame are clean; including the work area and floor area. Pick up loose parts from floor.

SERVICE PARTS: FULL OPEN, NH KIT, H105: P/N A-00625

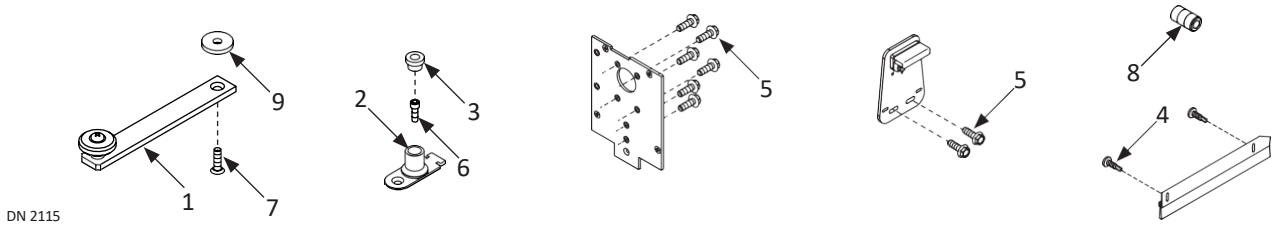

Full Open Parts Kit: Non-Handed P/N A-00625					
Item	**Part**	**Note**	**Description**	**QTY**	**Used To**
1	A-00406		LIMIT ARM, SWING PANEL, MED STILE	1	Allow Sidelite to swing Open and Closed
2	M-00975		PIVOT, FLOOR, SWING PANEL, HURRICANE	1	Allow Sidelite to swing Open and Closed
3	M-00606		BUSHING, BOTTOM PIVOT, SWING PANEL	1	Prevents wear and noise
4	T-00222	Zinc	PHSMS,6x0.500L.,PHIL,TEKS,ZINC	12	Secure Brush Holder to Door Panel(s)
	T-00260	Blk Zinc	PHSMS,6x0.500L. PHIL,TEKS BLK ZN		
5	T-00010		HHCS,1/4-20x0.750L.,WHIZLOCK,ZINC	2	Secure Belt Bracket to Carrier on top of Slide Door
				12	Secure Header to Jamb Tubes
6	T-00077		SHCS,1/4-20x0.750L.,ZINC	1	Secure Bottom Pivot to Floor
7	T-00083		FHMS,1/4-20x1.000L.,PHIL,UCUT,VIBRATITE	1	Secure Limit Arm to bottom of Header
8	T-00322		SHSS,5/16-24x0.625L.,CUP PT.	1	Adjust PreLoad on Slide Door (at top of Strike Stile)
9	T-00069		WASHER,.255 ID,.900 OD,.125 THK,NYLON	1	Keep Screw from digging into face of Limit Arm

SERVICE PARTS: FIXED SIDELITE, H105
RH KIT: P/N A-00624; LH KIT: A-00623

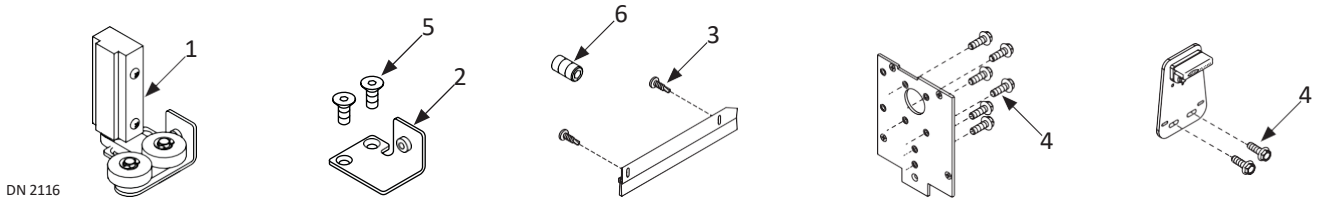

Fixed Sidelite Parts Kit: RH Hand P/N A-00624; LH Hand P/N A-00623					
Item	**Part**	**Note**	**Description**	**QTY**	**Used To**
1	A-00345	RH	ASM, LOWER PIVOT, FSRH, HURRICANE	1	Allow Slide Door to Open/Close. Roller portion is inserted into Bottom of Strike Stile on Fixed Sidelite.
	A-00346	LH	ASM, LOWER PIVOT, FSLH, HURRICANE		
2	M-00993	RH	BRACKET, THRESHOLD, FS, HURRICANE, RH	1	Cover opening on Pivot Stile
	M-00994	LH	BRACKET, THRESHOLD, FS, HURRICANE, LH		
3	T-00222	Zinc	PHSMS,6x0.500L.,PHIL,TEKS,ZINC	12	Secure Brush Holder to Door Panel(s)
	T-00260	Blk Zinc	PHSMS,6x0.500L. PHIL,TEKS BLK ZN		
4	T-00010		HHCS,1/4-20x0.750L.,WHIZLOCK,ZINC	12	Secure Header to Jamb Tubes
				2	Secure Belt Clip to Carrier
5	T-00174		FHCS,1/4-20x0.625L.,ZINC	2	Secure Threshold Bracket to Floor
				2	Secure Cover Plate to Panel
6	T-00322		SHSS,5/16-24x0.625L.,CUP PT.	1	Adjust PreLoad on Slide Door (at top of Strike Stile)

SERVICE PARTS: HEADER

Viewed from Break Out Side

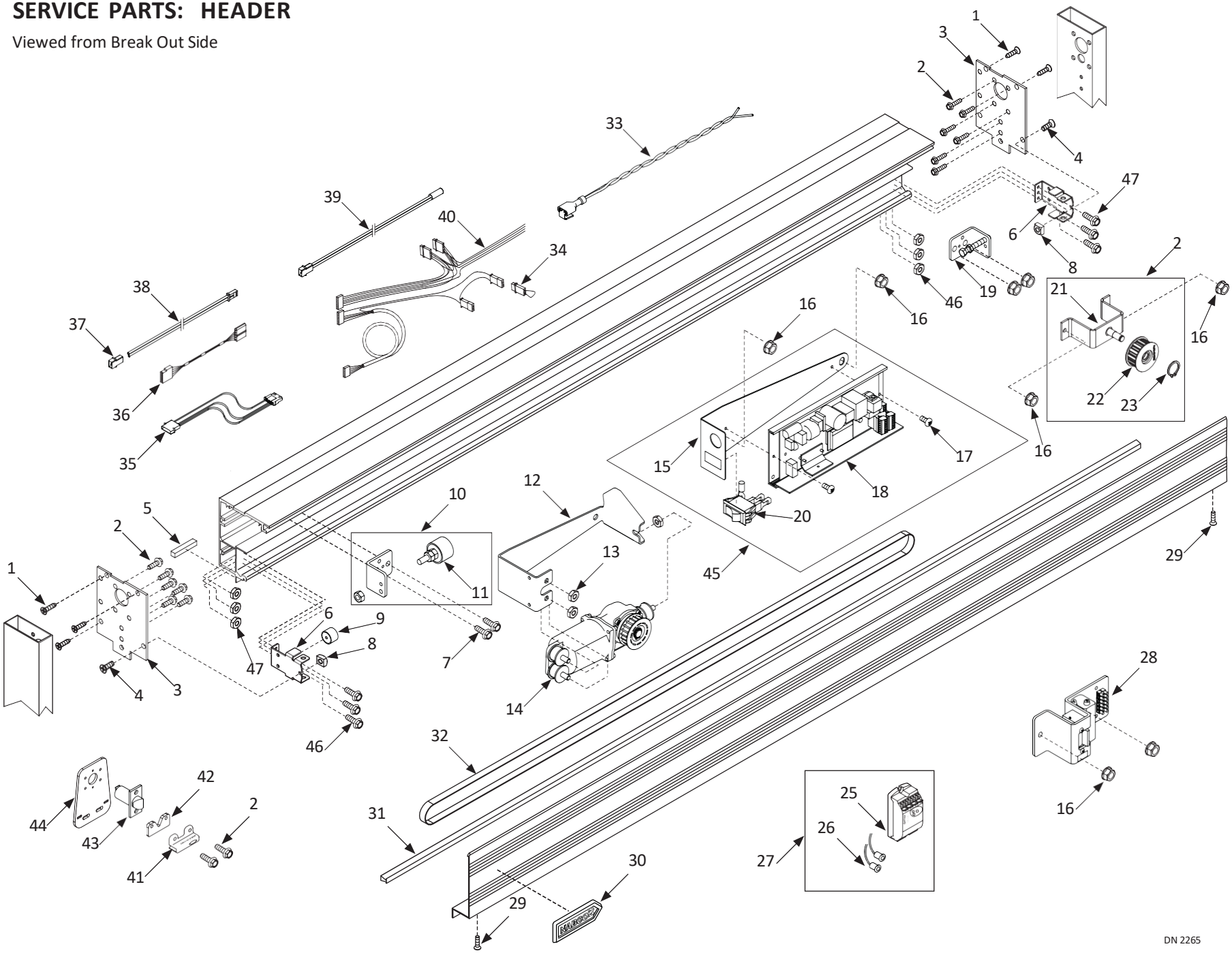

GT1175 (H105) Header			
Item		Finish/Sizes/Notes	Description
1	T-00061	Zinc	FHMS,1/4-20x1.000L.,PHIL,TRI-LOBE,ZINC
	T-00022	Black Zinc	FHMS,1/4-20x1.000L.,PHIL,TRI-LOBE,BLK ZN
2	T-00010	In all Part Bags	HHCS,1/4-20x0.750L.,WHIZLOCK,ZINC
3	M-60582	RH/Clear	END CAP,ONE PIECE HEADER,RH,204
	M-70582	RH/Dark Bronze	END CAP,ONE PIECE HEADER,RH,313
	M-60574	LH/Clear	END CAP,ONE PIECE HEADER,LH,204
	M-70574	LH/Dark Bronze	END CAP,ONE PIECE HEADER,LH,313
4	T-00015	Zinc	FHMS,1/4-20x0.750L.,PHIL,ZINC
	T-00017	Black Zinc	FHMS,1/4-20x0.750L.,PHIL,BLK ZN
5	M-00281		FOAM WEATHERSTRIPPING ADHESIVE BACKED
6	M-00411	Without Stud	BRACKET,END CAP,HEADER
	M-00411-01	With Stud	BRACKET,END CAP,HEADER,W/ STUD
7	T-00119		HHCS,1/4-20x0.750L.,WASH HD.TRILOBE,ZINC
8	T-00058		NUT,SQ.,1/4-20,ZINC
9	M-00530		BUMPER, RUBBER, 1/4”-20 THREAD
10	A-00128		DOOR STOP,ASM.
11	A-00087		BUMPER,HEADER DOOR STOP
12	M-02035		BRACKET,MOUNTING,VS150
13	T-00495		NUT,WHIZLOCK,M8-1.25,ZINC
14	V-00914		OPERATOR,VS-150
15	M-02041		BRACKET,OPUS,1175
16	T-00025		NUT,WHIZLOCK,3/8-16,ZINC
17	T-00420		PHMS,8-32x0.375L,PHIL,SWAGEFORM,ZINC
18	M-01546		CONTROLLER,OPUS
19	A-00078		BELT,DRIVE,IDLER SPROCKET,TENSIONER
20	M-02042		HARNESS,POWER,1175,OPUS
21	M-02036		BRACKET,IDLER PULLEY,VS-150
22	V-00915		PULLEY,IDLER,VS-150
23	T-00509		RING,RETAINING,EXT,12mm SHAFT
24	A-01419		ASM,IDLER,VS-150
25	A-00129		AMPLIFIER, PHOTOEYE, OPTEX ASSY
26	V-00073		HOLDING BEAM,PHOTO ELECTRIC,W/ EXT CABLE
27	A-00709		HOLDING BEAM SYSTEM
28	A-00342	Fail Secure	LOCK, ELECTRIC,FAIL SECURE,1175
	A-00341	Fail Safe	LOCK, ELECTRIC,FAIL SAFE,1175
29	T-00496	Zinc	PHMS,10-24X0.625L.,PHIL,SWAGEFORM,ZINC
	T-00497	Black Zinc	PHMS,10-24X0.625L.,PHIL,SWAGEFORM,BLK ZN
30	C-00067		NAMEPLATE, ADHESIVE BACKED
31	M-00688		PILE WEATHERING .45 TALL W/ ADHESIVE

GT1175 (H105) Header			
Item		Finish/Sizes/Notes	Description
32	V-00917		BELT,TIMING,S8M X 12mm WIDE
33	M-02044		HARNESS,ELECTRIC LOCK,1175,OPUS
34	A-00385		BREAKOUT JUMPER
35	M-01168	24 inches	HARNESS,EXTENSION,1175 SENSOR,24”
	M-02064	38 inches	HARNESS,EXTENSION,1175 SENSOR,38”
	M-01156	48 inches	HARNESS,EXTENSION,1175 SENSOR,48”
36	A-00967	36 inches	HARNESS;EXTENSION;ROCKER SWITCH;36IN.
37	V-00034		HOUSING,2 POS,FOR MATE-N-LOCK PINS
38	M-01070	15 inches	HARNESS,BREAKOUT,1175,15
	M-01136	40 inches	HARNESS,BREAKOUT,1175,40
39	A-00758		SWITCHBREAKOUT
40	M-02043		HARNESS, MAIN,1175,OPUS
41	V-00916		CLIP,BELT,”S8M” PROFILE
42	M-02039		SPACER,BELT CLIP,VS-150
43	A-00264		LATCHBOLT, HEAVY DUTY, MODIFIED
44	M-02038		BRACKET,BELT CLIP,VS-150
45	A-01418		ASM,OPUS CONTROLLER,1175
46	T-00056		NUT,WHIZLOCK,1/4-20,ZINC
47	T-00077		SHCS,1/4-20x0.750L.,ZINC

SERVICE PARTS: SLIDE DOOR CARRIERS

Viewed from Break Out Side

Single Slide Doors

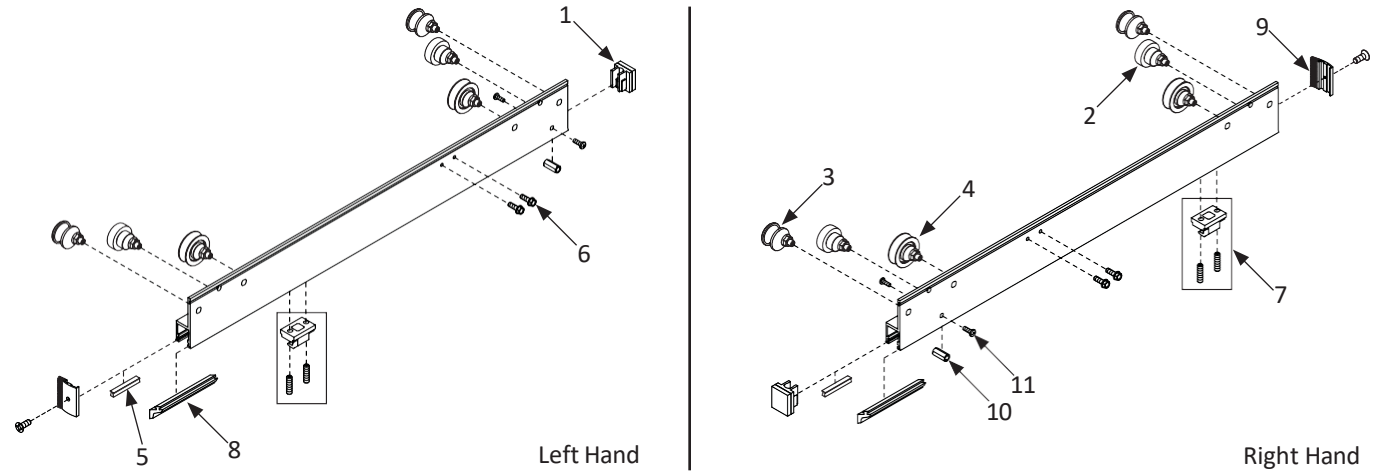

BiPart Slide Doors

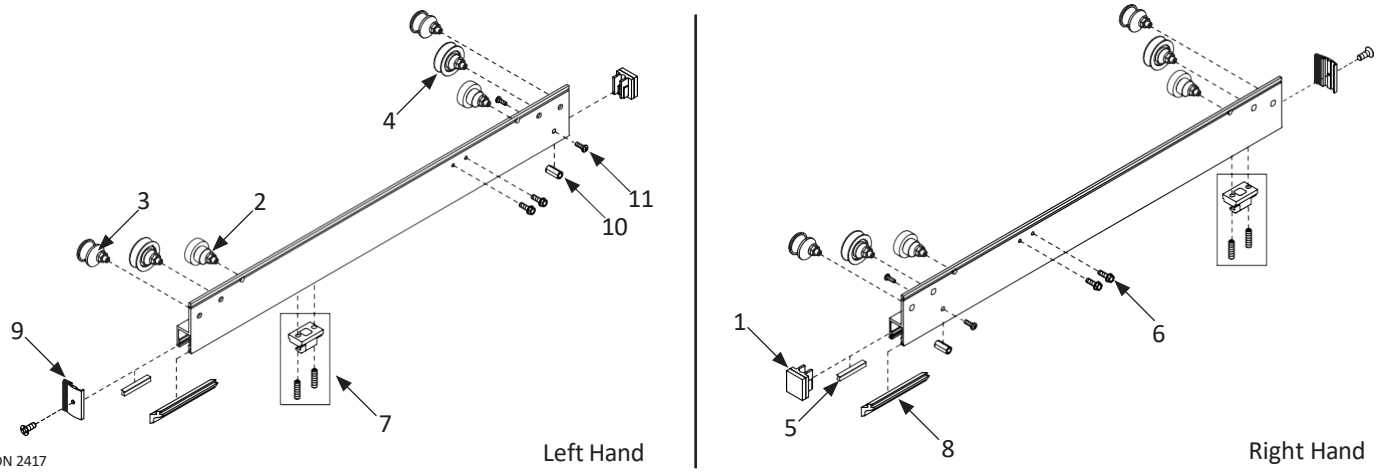

GT1175 (H105) Slide Door Carrier			
Item	**Part**	**Finish/Sizes/Notes**	**Description**
1	A-00301		ASM, ENDCAP, CARRIER
2	A-00305		ASM, ANTI-RISE, HURRICANE
3	A-00319		ASM, RETAINER, CARRIER, ECCENTRIC
4	A-00162		ROLLER, HANGER, ASSEMBLY, 1175
5	M-00690		WEATHER, PILE .2
6	T-00119		HHCS,1/4-20x0.750L.,WASH HD.TRILOBE,ZINC
7	A-00071		PANIC CATCH, UPPER,ASM.
8	M-60288	Clear	INTERFACE LEG,204,EXTRU
	M-70288	Dark Bronze	INTERFACE LEG,313,EXTRU
9	A-00415		END CAP W/ BRUSH,7/16x1-7/8,204
10	T-00398		NUT,COUPLING,1/4-20x0.875L.
11	T-00326		RHMS,1/4-20x0.750L.,PHIL,ZINC SELF TAPNG

SERVICE PARTS: LOCK OPTION (WITH PANIC DEVICE)

Viewed from Non-Break Out Side

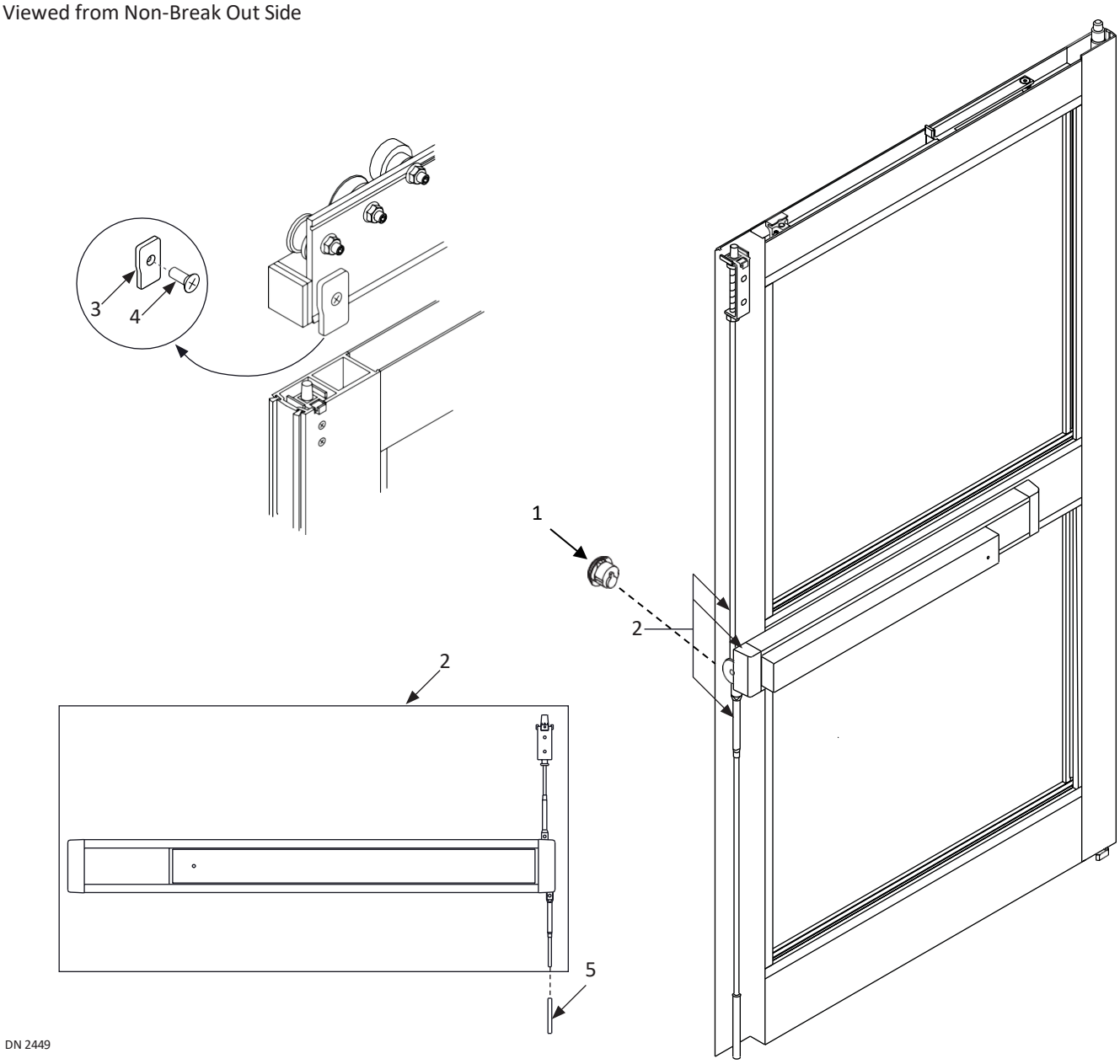

Lock Option with Panic Device			
Item	**Part**	**Finish/Sizes/Notes**	**Description**
1	V-00123	Clear	CYLINDER,LOCK,KEYED,204
	V-70123	Dark Bronze	CYLINDER,LOCK,KEYED,313
2	V-00069	Clear	LOCK,PANIC,ADAMS-RITE G86,204
	V-70069	Dark Bronze	LOCK,PANIC,ADAMS-RITE G86,313
3	A-61170	Clear	PLATE, G86, LOCK,204
	A-71170	Dark Bronze	PLATE, G86, LOCK,313
4	T-00041		FHMS,10-32x0.500L.,PHIL,ZINC
5	M-00998		LOCKROD, END, #12-24

SERVICE PARTS: LOCK OPTIONS (NO PANIC DEVICE)

Viewed from ***Non-Break Out*** Side

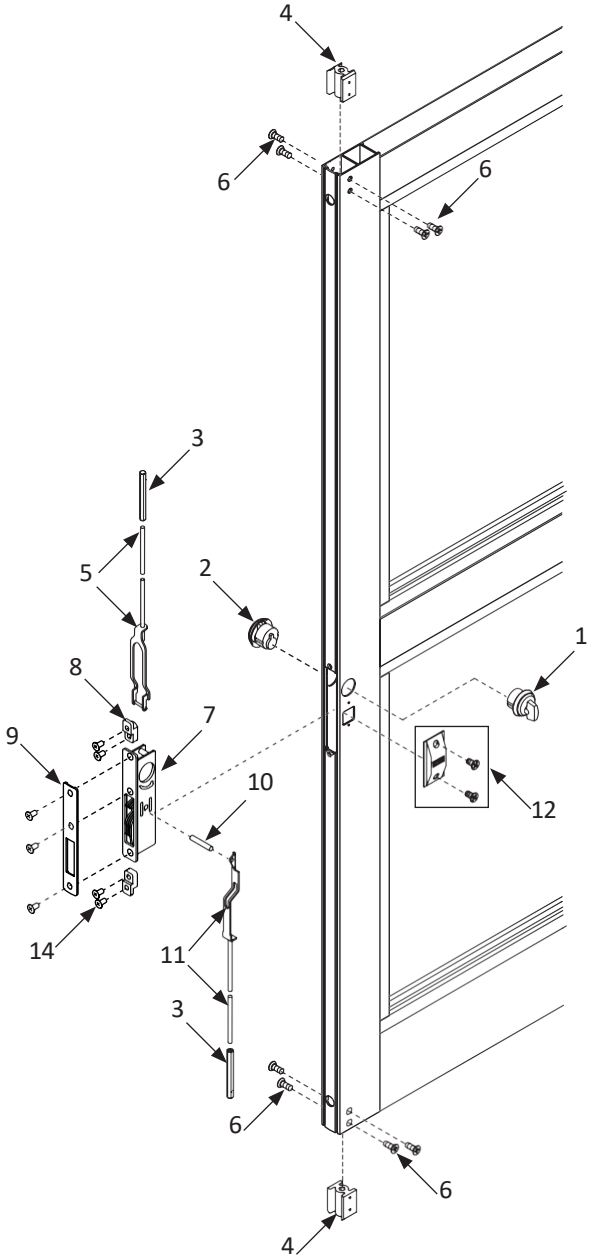

Three Point Lock

DN 2450

Two Point Lock

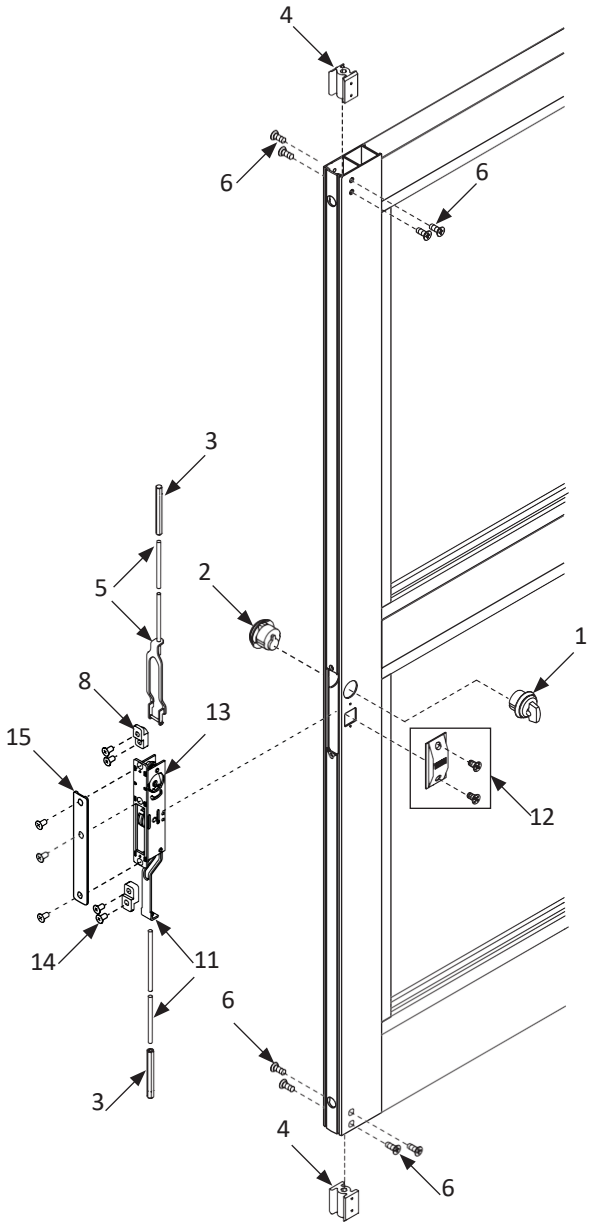

Lock Options			
Item	**Part**	**Finish/Sizes/Notes**	**Description**
1	V-00116	Clear	CYLINDER,LOCK,THUMBTURN,204
	V-70116	Dark Bronze	CYLINDER,LOCK,THUMBTURN,313
2	V-00123	Clear	CYLINDER,LOCK,KEYED,204
	V-70123	Dark Bronze	CYLINDER,LOCK,KEYED,313
3	M-00997		LOCKROD, END, 1/4”-20
4	M-00807		BLOCK, GUIDE, LOCKROD
5	V-00303		LOCKROD, ADAMS-RITE #4016
6	T-00176		FHMS,10-32x0.500L.,PHIL,UCUT,23-PT,ZINC
7	V-00005		LOCK, ADAMS-RITE #MS1853
8	M-00471		BLOCK,MOUNTING, LOCK COVER,MS LOCK
9	V-00014	Clear	COVER,MS LOCK,W/ CUTOUT,204
	V-70014	Dark Bronze	COVER,MS LOCK,W/ CUTOUT,313
10	T-00132		PIN,ROLL,5/32D X 0.875L.
11	V-00094		LOCKROD, ADAMS-RITE #4015
12	V-00018	Clear, Hook Bolt Extends “Up”	EXIT INDICATOR,INVERTED,204
	V-70018	Dark Bronze, Hook Bolt Extends “Up”	EXIT INDICATOR,INVERTED,313
	V-00017	Clear, Hook Bolt Extends “Down”	EXIT INDICATOR,STANDARD,204
	V-70017	Dark Bronze, Hook Bolt Extends “Down”	EXIT INDICATOR,STANDARD,313
13	V-00012		FLUSHBOLT,ADAMSRITE MS1870
14	T-00043		FHMS,10-24x0.375L.,PHIL,UNDERCUT,ZINC
15	V-00096	Clear	COVER,MS LOCK,W/O CUTOUT,204
	V-70096	Dark Bronze	COVER,MS LOCK,W/O CUTOUT,313

SERVICE PARTS: FULL OPEN SIDELITE

Viewed from ***Non-Break Out*** Side

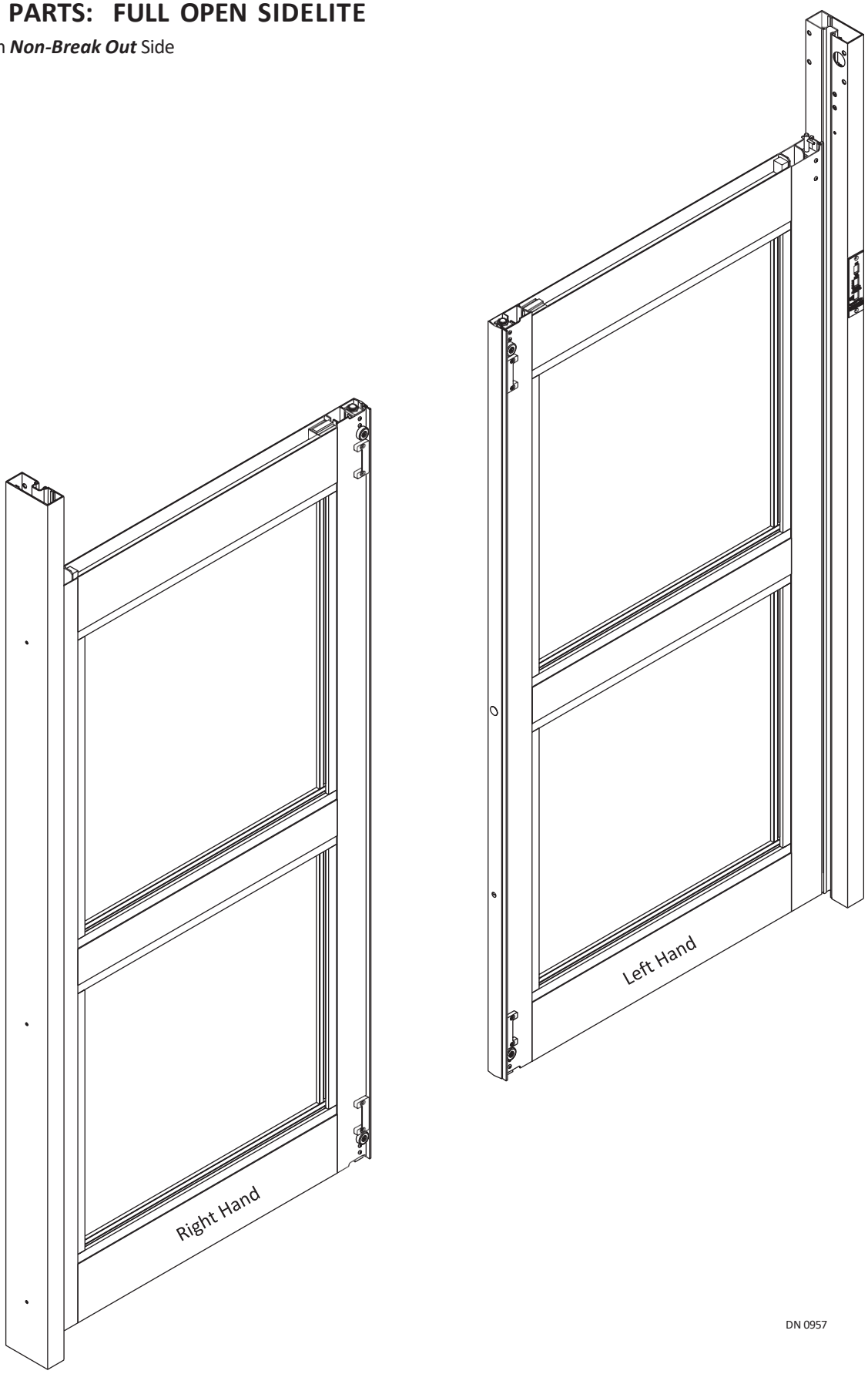

SERVICE PARTS: LEFT HAND FULL OPEN SIDELITE

Viewed from ***Non-Break*** Out Side

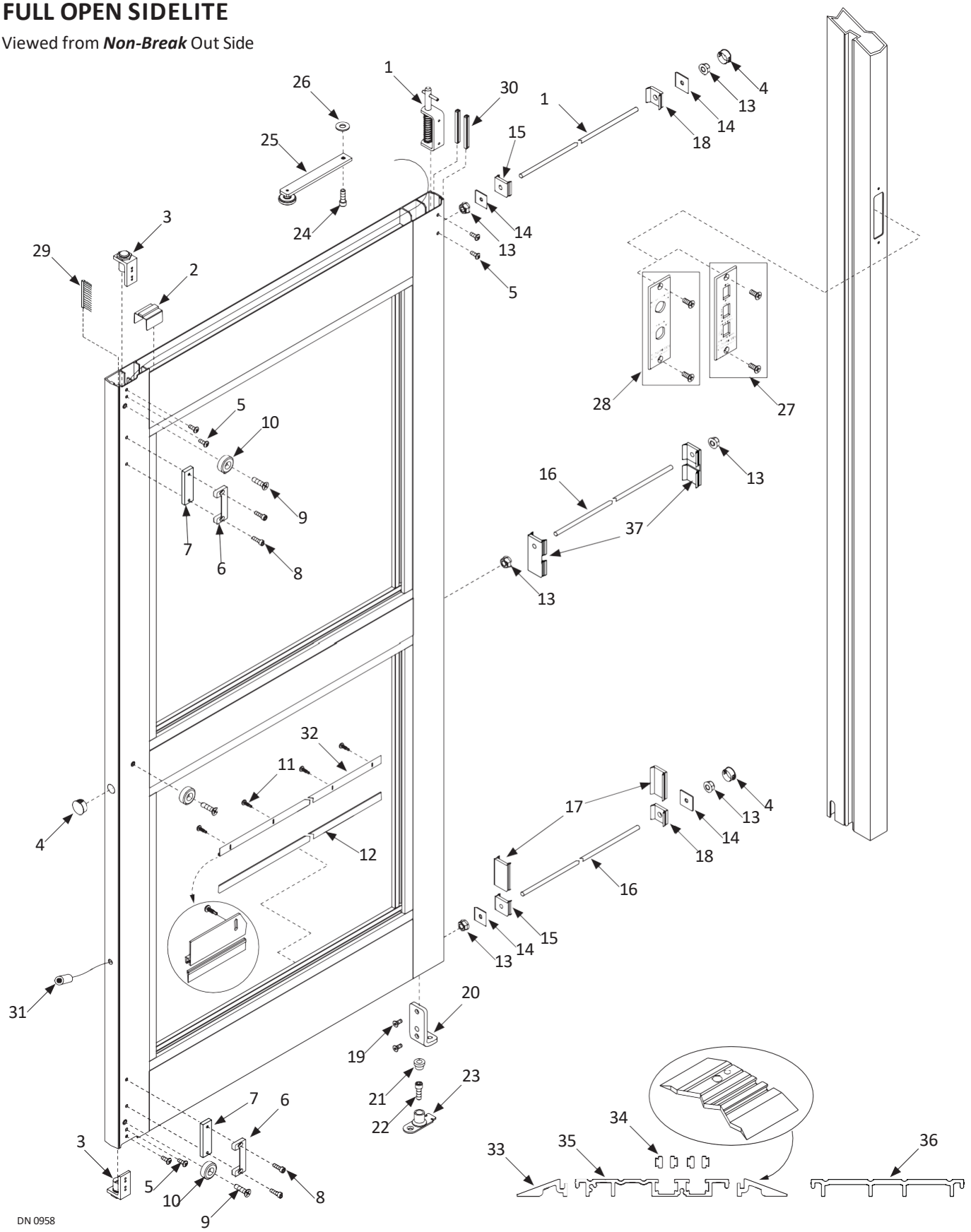

SERVICE PARTS: RIGHT HAND FULL OPEN SIDELITE

Viewed from ***Non-Break*** Out Side

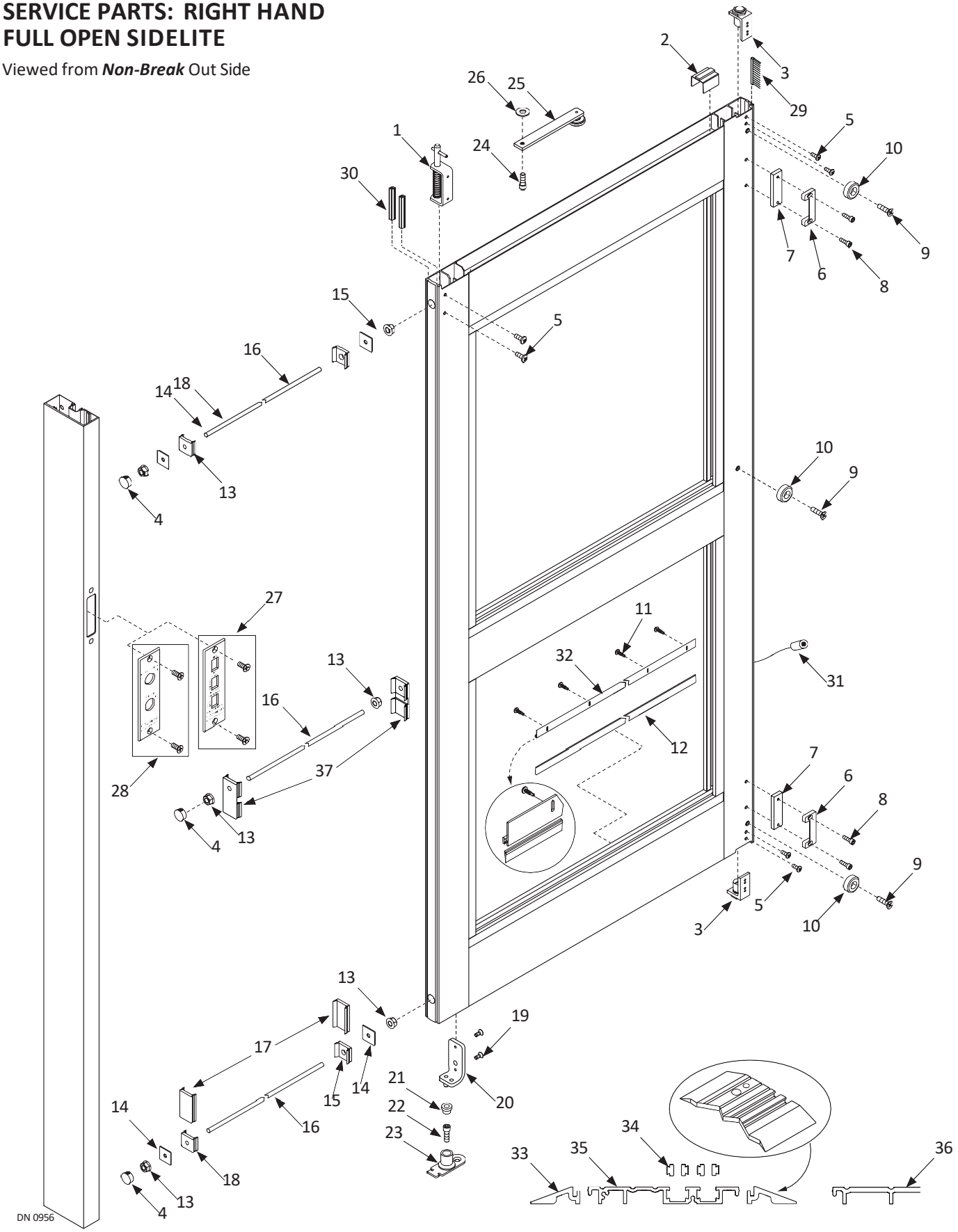

GT1175 (H105) Full Open Sidelite			
Item	Part	Finish/Sizes/Notes	Description
1	A-00029		ASM, TOP PIVOT, 1175 SWING PANEL
2	A-00149		ASM, MAGNET, BREAKOUT
3	A-00057		BALL DETENT,ASSEMBLY
4	V-00720		PLUG,HOLE,13/16 DOME
5	T-00027	Zinc	PHMS,10-32x0.500L.,PHIL.ZINC
	T-00051	Black Zinc	PHMS,10-32x0.500L.,PHIL,BLK ZN
6	M-00973		INTERLOCK, FEMALE
7	A-00282		NUT BAR,FEMALE,INTERLOCK,
8	T-00175		SHCS,10-32x0.625L.,ZINC
9	T-00061		FHMS,1/4-20x1.000L.,PHIL,TRI-LOBE,ZINC
10	M-00960		PAD, WEAR
11	T-00222	Zinc, In Part Bag A-00625	PHSMS,6x0.500L.,PHIL,TEKS,ZINC
	T-00260	Black Zinc, In Part Bag A-00625	PHSMS,6x0.500L. PHIL,TEKS BLK ZN
12	M-71239		WEATHERING:VINYL:1.00:BLK
13	T-00025		NUT,WHIZLOCK,3/8-16,ZINC
14	M-00422		PLATE,TIE ROD
15	M-00870		CLIP, RAIL, .391 HOLE
16	M-00272		3/8-16 THREADED ROD
17	M-00880		CLIP, RAIL, 2.9” LONG
18	M-00871		CLIP, RAIL, .500 HOLE
19	T-00174	In Part Bag A-00625	FHCS,1/4-20x0.625L.,ZINC
20	M-00744	RH	PIVOT, BOTTOM, SWING PANEL, RH
	M-00745	LH	PIVOT, BOTTOM, SWING PANEL, LH
21	M-00606	In Part Bag A-00625	BUSHING, BOTTOM PIVOT, SWING PANEL
22	T-00077		SHCS,1/4-20x0.750L.,ZINC
23	M-00975	In Part Bag A-00625	PIVOT, FLOOR, SWING PANEL, HURRICANE
24	T-00083		FHMS,1/4-20x1.000L.,PHIL,UCUT,VIBRATITE
25	A-00406	In Part Bag A-00625	LIMIT ARM, SWING PANEL, MED STILE
26	T-00069		WASHER,.255 ID,.900 OD,.125 THK,NYLON
27	M-00428		SWITCH MODULE,3 ROCKER,NABCO
	M-00429		SWITCH MODULE,3 ROCKER,PORTA
28	M-01144		SWITCH, KEY - NABCO
	M-01145		SWITCH, KEY - PORTA SERVICE
29	M-00695		BRUSH, NYLON, .56 L
30	M-00691		WEATHERING, PILE .45 W/ FIN
31	V-00073		HOLDING BEAM,PHOTO ELECTRIC,W/ EXT CABLE
32	M-60278	Order by Length, Clear	HOLDER,WEATHERING BRUSH,204,EXTRU
	M-70278	Order by Length, Dark Bronze	HOLDER,WEATHERING BRUSH,313,EXTRU
33	M-60260		RAMP, THRESHOLD EXTENSION,204,EXTRU

GT1175 (H105) Full Open Sidelite			
Item	Part	Finish/Sizes/Notes	Description
34	M-00291		THRESHOLD, BUMPER
35	M-00258		THRESHOLD,USE M-60258
36	M-00858		THRESHOLD,FSL,EXTRU
37	A-01270		CLIP,RAIL,4 MUNTIN,.391 HOLE

SERVICE PARTS: FULL OPEN SLIDE DOOR

Viewed from Non-Break Out Side

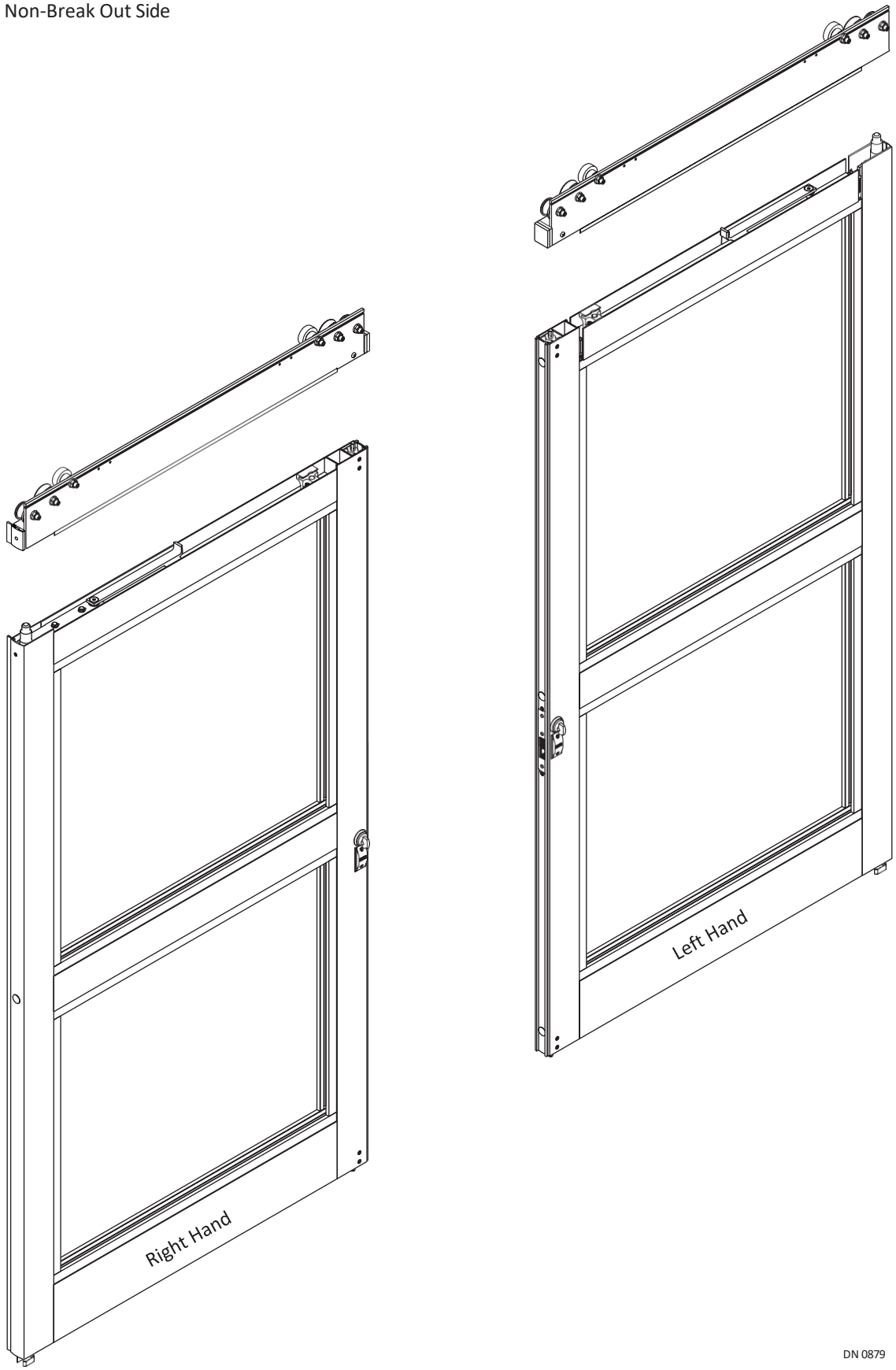

SERVICE PARTS: LEFT HAND FULL OPEN SLIDE DOOR

Viewed from ***Non-Break*** Out Side

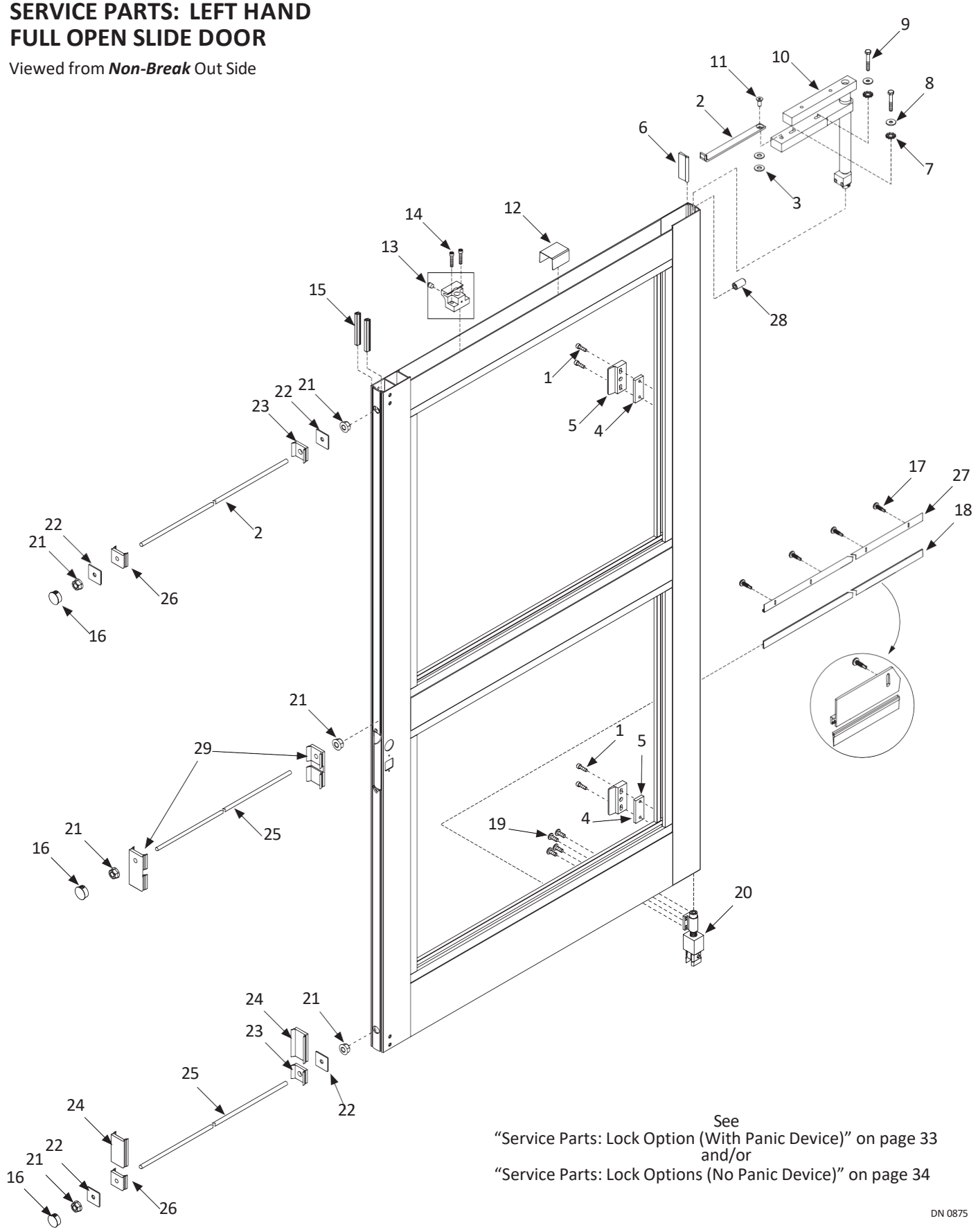

See
"Service Parts: Lock Option (With Panic Device)" on page 33
and/or
"Service Parts: Lock Options (No Panic Device)" on page 34

DN 0875

SERVICE PARTS: RIGHT HAND FULL OPEN SLIDE DOOR

Viewed from ***Non-Break*** Out Side

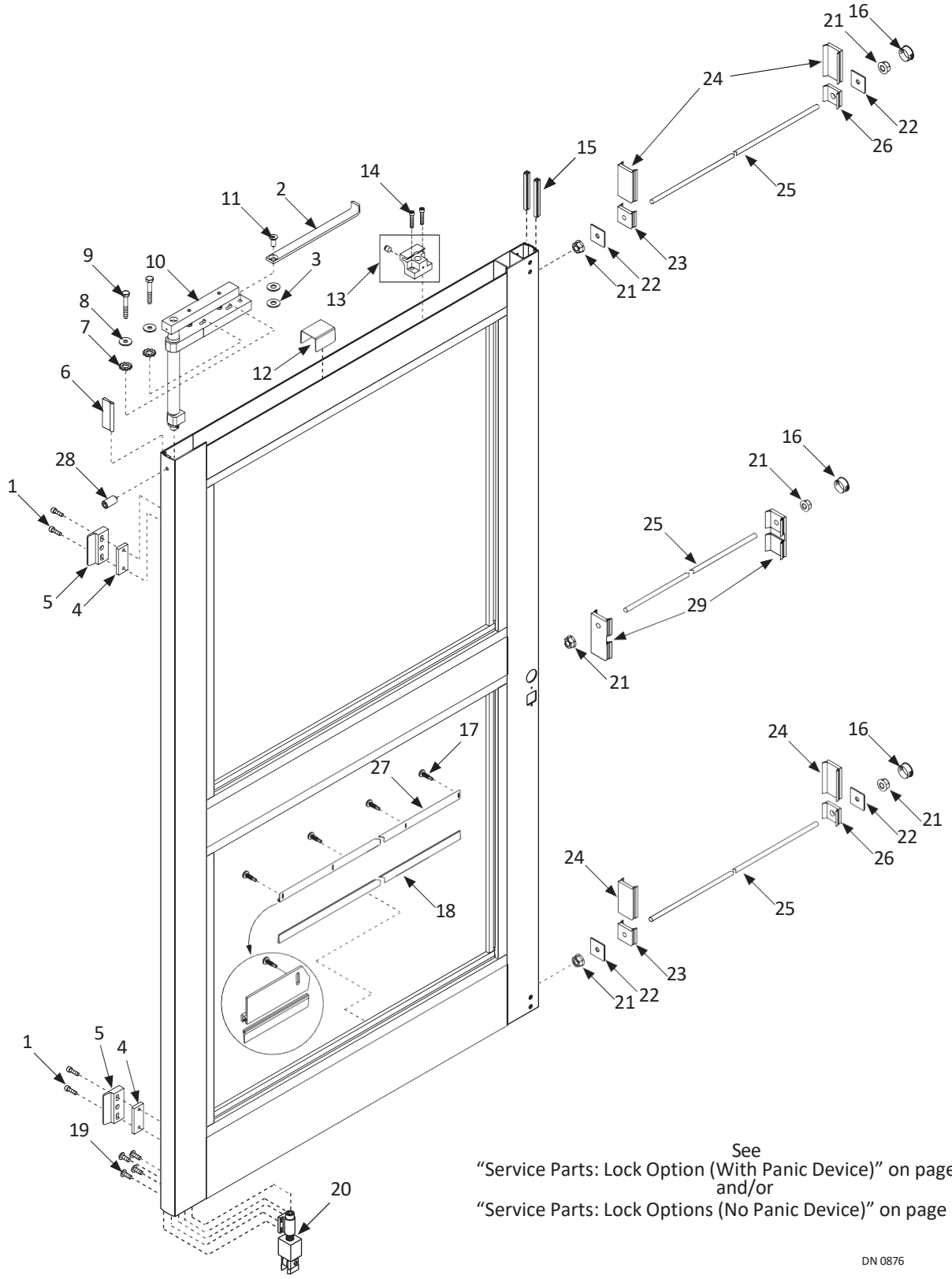

See
"Service Parts: Lock Option (With Panic Device)" on page 33
and/or
"Service Parts: Lock Options (No Panic Device)" on page 34

DN 0876

GT1175 (H105) Full Open Slide Door			
Item	**Part**	**Finish/Sizes/Notes**	**Description**
1	T-00175		SHCS,10-32x0.625L.,ZINC
2	M-00704		ARM, LIMIT, MEDIUM STILE
3	T-00092		WASHER,.438 ID,1.00 OD,.083 THK,ZINC
4	A-00924		BAR, NUT, MALE INTERLOCK
5	A-00324		ASM, INTERLOCK, MALE, HURRICANE
6	M-00695		BRUSH, NYLON, .56 L
7	T-00087		WASHER, LOCK, EXT, 1/4 ID, ZINC
8	T-00029		WASHER,.250 ID,.563 OD,.049 THK,ZINC
9	T-00028		HHCS,1/4-20x1.750L.,GR5,ZINC
10	A-00323		ASM, CARRIER BAR, MEDIUM STILE HURRICANE
11	T-00093		FHCS,7/16-14x1.000L.,ZINC,W/ NYLON PATCH
12	M-00653		BRACKET, LIMIT ARM SUPPORT
13	A-00069		PANIC CATCH, BOTTOM
14	T-00037		SHCS,1/4-20x1.250L.,ZINC
15	M-00340		WEATHERING,PILE .37
16	V-00720		PLUG,HOLE,13/16 DOME
17	T-00222	Zinc, In Part Bag A-00625	PHSMS,6x0.500L.,PHIL,TEKS,ZINC
	T-00260	Black Zinc, In Part Bag A-00625	PHSMS,6x0.500L. PHIL,TEKS BLK ZN
18	M-01526		BRUSH,NYLON,1 LG
19	T-00027		PHMS,10-32x0.500L.,PHIL.ZINC
20	A-00335		BOTTOM GUIDE,FO
21	T-00025		NUT,WHIZLOCK,3/8-16,ZINC
22	M-00422		PLATE,TIE ROD
23	M-00870		CLIP, RAIL, .391 HOLE
24	M-00880		CLIP, RAIL, 2.9” LONG
25	M-00272		3/8-16 THREADED ROD
26	M-00871		CLIP, RAIL, .500 HOLE
27	M-60278	Order by Length, Clear	HOLDER,WEATHERING BRUSH,204,EXTRU
	M-70278	Order by Length, Dark Bronze	HOLDER,WEATHERING BRUSH,313,EXTRU
	T-00322	In Part Bag A-00625	SHSS,5/16-24x0.625L.,CUP PT.
28	A-01270		CLIP,RAIL,4 MUNTIN,.391 HOLE
29	M-00807		BLOCK, GUIDE, LOCKROD
30	T-00176		FHMS,10-32x0.500L.,PHIL,UCUT,23-PT,ZINC

SERVICE PARTS: FIXED SIDELITE

Viewed from ***Break Out*** Side

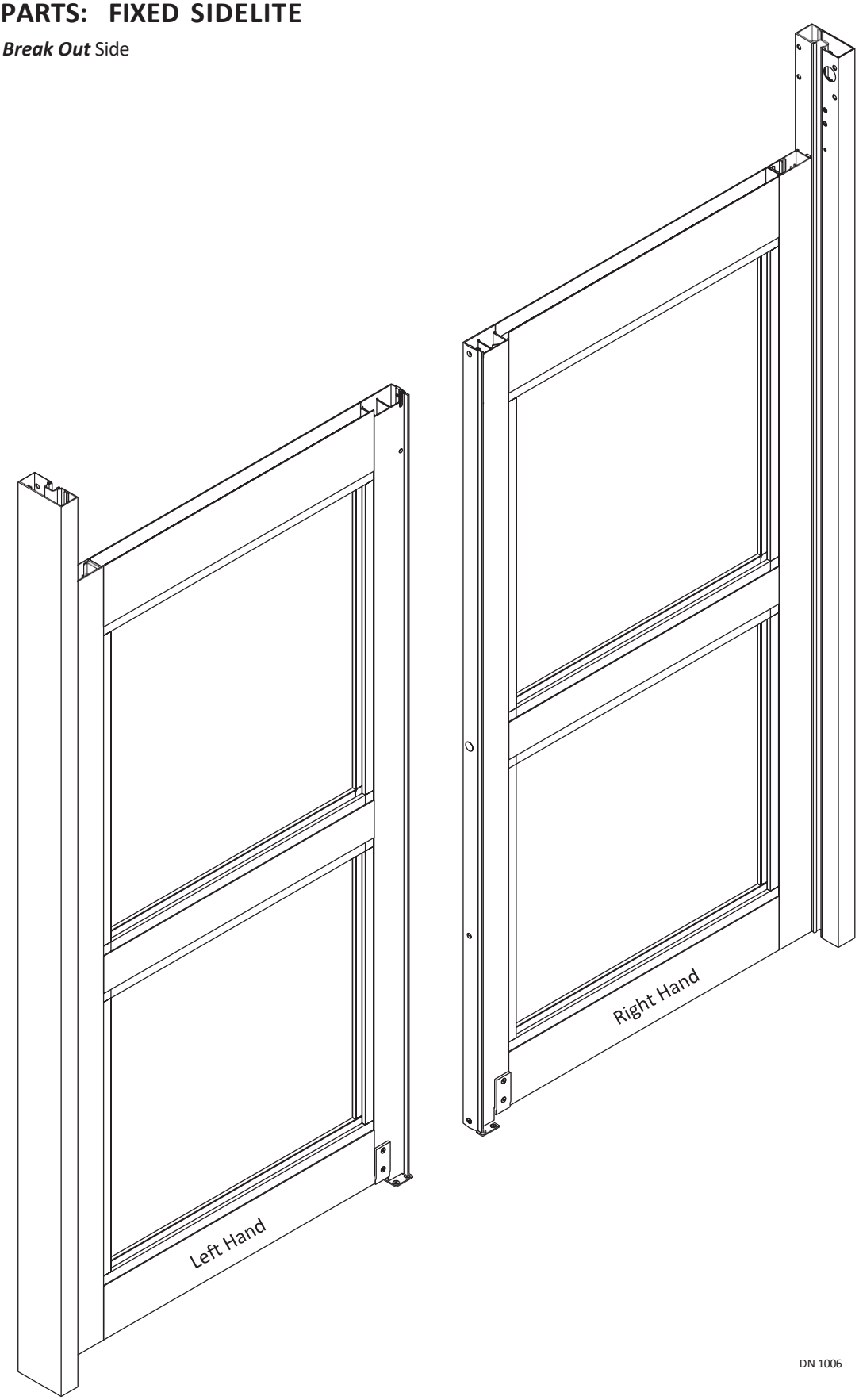

SERVICE PARTS: LEFT HAND FIXED SIDELITE

Viewed from ***Break Out*** Side

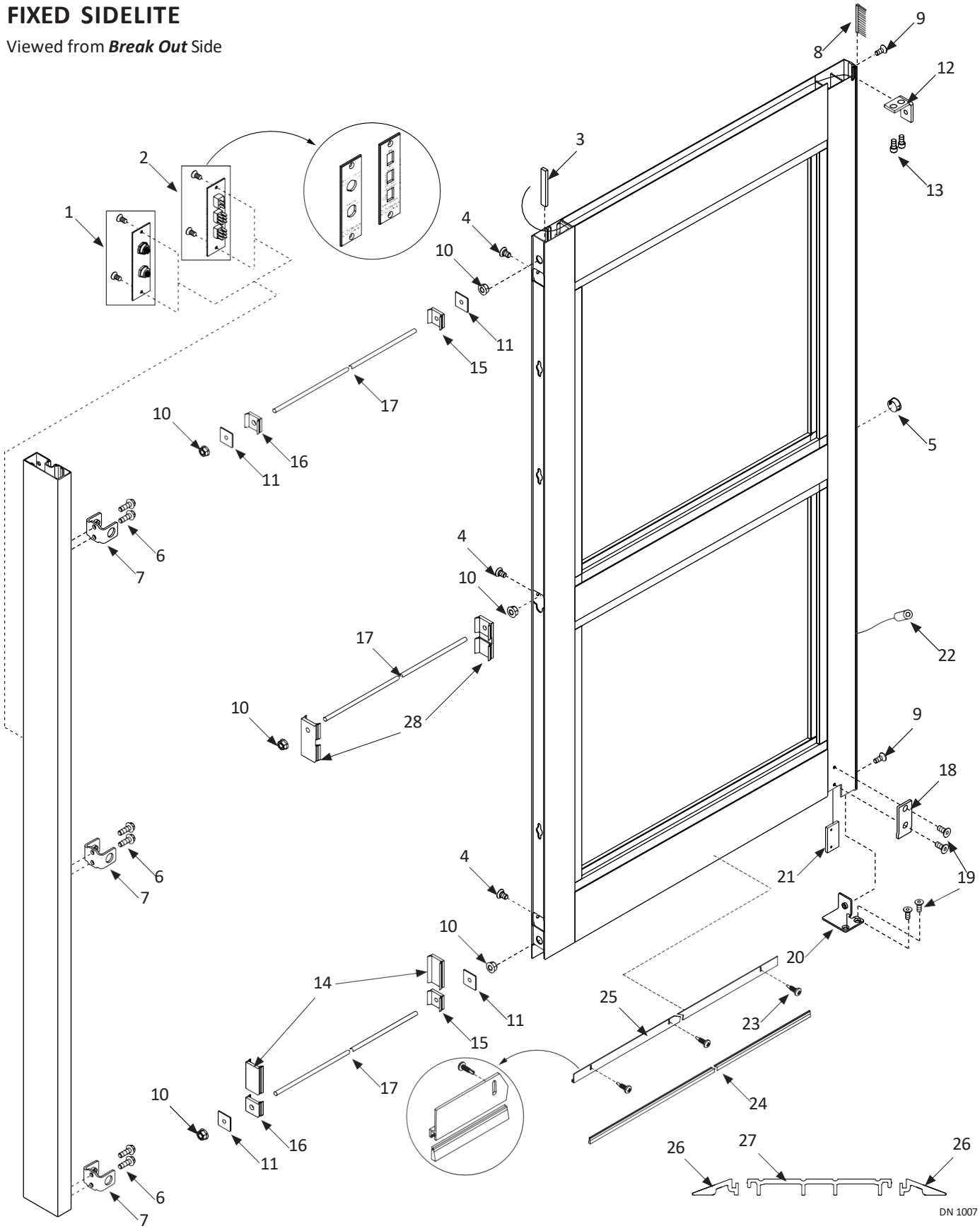

SERVICE PARTS: RIGHT HAND FIXED SIDELITE

Viewed from ***Break Out*** Side

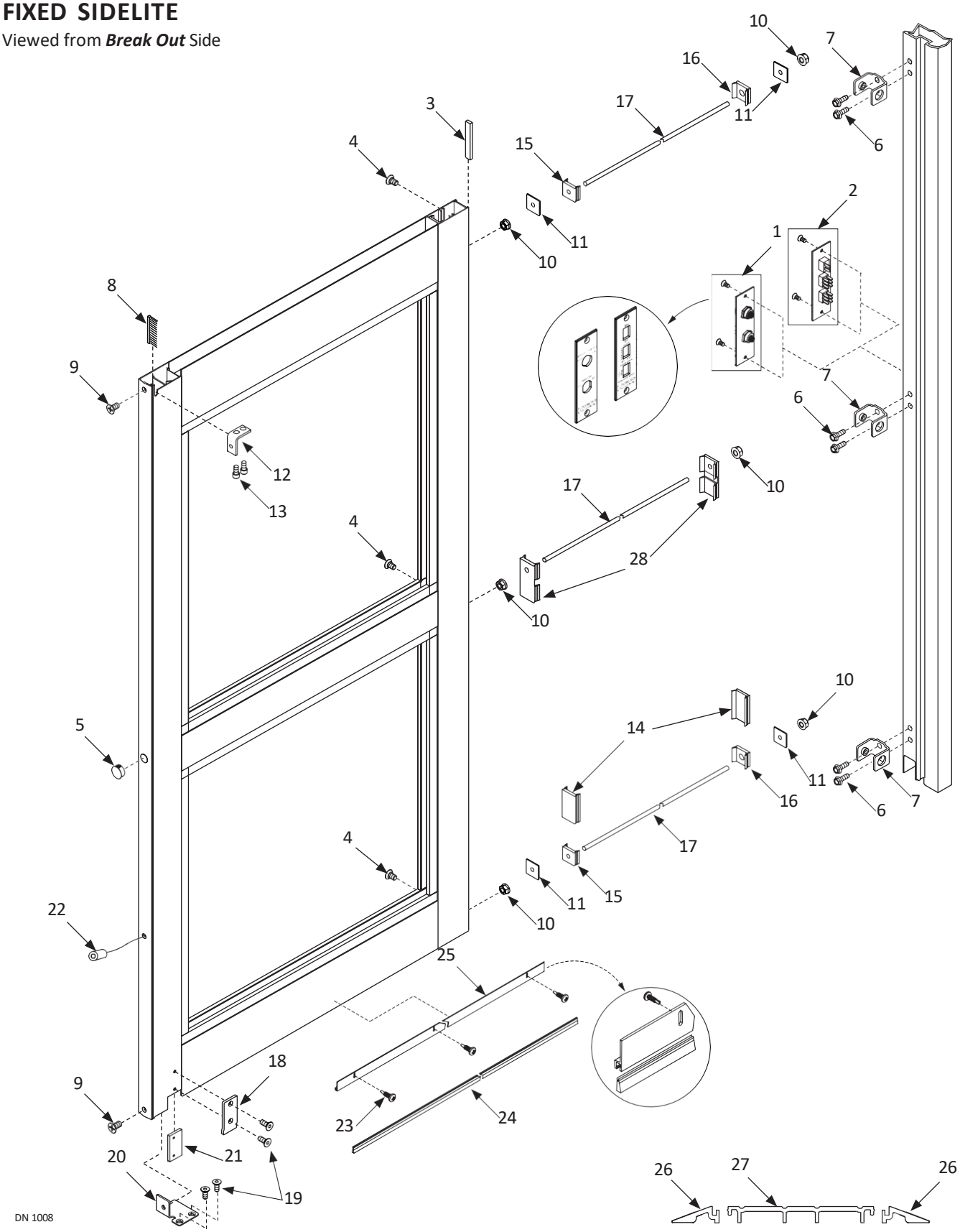

GT1175 (H105) Fixed Sidelite			
Item	**Part**	**Finish/Sizes/Notes**	**Description**
1	M-01144		SWITCH, KEY - NABCO
	M-01145		SWITCH, KEY - PORTA SERVICE
2	M-00428		SWITCH MODULE,3 ROCKER,NABCO
	M-00429		SWITCH MODULE,3 ROCKER,PORTA
3	M-00281		FOAM WEATHERSTRIPPING ADHESIVE BACKED
4	T-00016		FHMS,1/4-20x0.438L.,PHIL,UNDERCUT,ZINC
5	V-00720		PLUG,HOLE,13/16 DOME
6	T-00010		HHCS,1/4-20x0.750L.,WHIZLOCK,ZINC
7	M-00972		BRACKET, JAMB TUBE, FS
8	M-00695		BRUSH, NYLON, .56 L
9	T-00055		FHMS,1/4-20x0.500L.,PHIL,ZINC
	T-00057		FHMS,1/4-20x0.500L.,PHIL,BLK ZN
10	T-00025		NUT,WHIZLOCK,3/8-16,ZINC
11	M-00422		PLATE,TIE ROD
12	M-00706		BRACKET,MOUNTING ,FIXED SIDELITE
13	T-00053		SHCS,1/4-20x0.500L.,ZINC
14	M-00880		CLIP, RAIL, 2.9” LONG
15	M-00871		CLIP, RAIL, .500 HOLE
16	M-00870		CLIP, RAIL, .391 HOLE
17	M-00272		3/8-16 THREADED ROD
18	M-00969		PLATE, COVER, FIXED SIDELITE
19	T-00174	In Part Bag A-00623 & A-00624	FHCS,1/4-20x0.625L.,ZINC
20	M-00993	RH, In Part Bag A-00623 & A-00624	BRACKET, THRESHOLD, FS, HURRICANE, RH
	M-00994	LH, In Part Bag A-00623 & A-00624	BRACKET, THRESHOLD, FS, HURRICANE, LH
21	A-00283		NUT PLATE,COVER,FS
22	V-00073		HOLDING BEAM,PHOTO ELECTRIC,W/ EXT CABLE
23	T-00222	Zinc, In Part Bag A-00623 & A-00624	PHSMS,6x0.500L.,PHIL,TEKS,ZINC
	T-00260	Black Zinc, In Part Bag A-00623 & A-00624	PHSMS,6x0.500L. PHIL,TEKS BLK ZN
24	M-01526		BRUSH,NYLON,1 LG
25	M-60278	Order by Length, Clear	HOLDER,WEATHERING BRUSH,204,EXTRU
	M-70278	Order by Length, Dark Bronze	HOLDER,WEATHERING BRUSH,313,EXTRU
	M-90278	Order by Length, Bone White	HOLDER:WEATHERING BRUSH:BW:EXTRU
26	M-60260		RAMP, THRESHOLD EXTENSION,204,EXTRU
27	M-00858		THRESHOLD,FSL,EXTRU
28	A-01270		CLIP,RAIL,4 MUNTIN,.391 HOLE

SERVICE PARTS: FIXED SIDELITE SLIDE DOOR

Viewed from Break Out Side

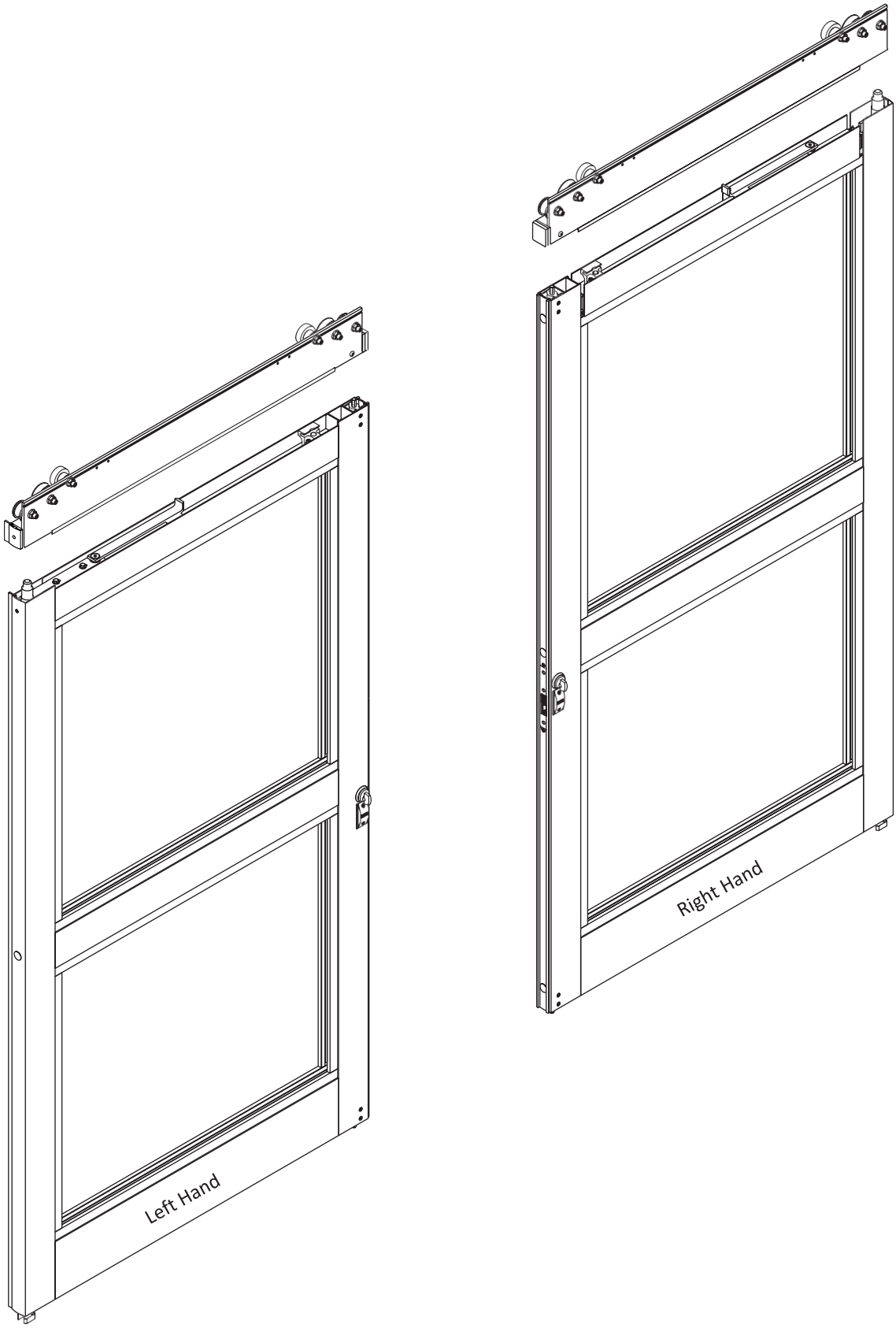

DN 1009

SERVICE PARTS: LEFT HAND FIXED SIDELITE SLIDE DOOR

Viewed from ***Break Out*** Side

See
"Service Parts: Lock Option (With Panic Device)" on page 33
and/or
"Service Parts: Lock Options (No Panic Device)" on page 34

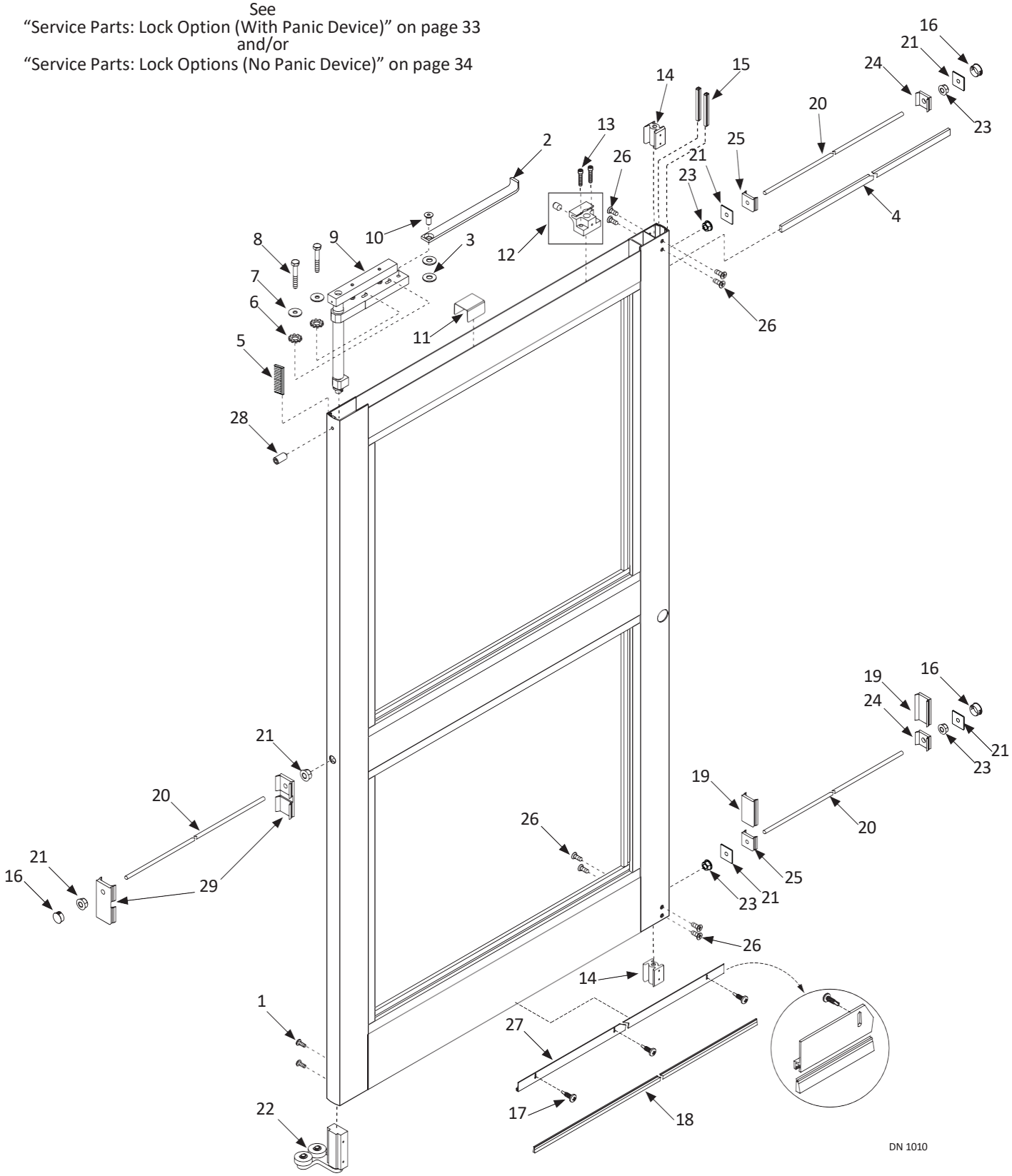

SERVICE PARTS: RIGHT HAND FIXED SIDELITE SLIDE DOOR

Viewed from ***Break Out*** Side

See
"Service Parts: Lock Option (With Panic Device)" on page 33
and/or
"Service Parts: Lock Options (No Panic Device)" on page 34

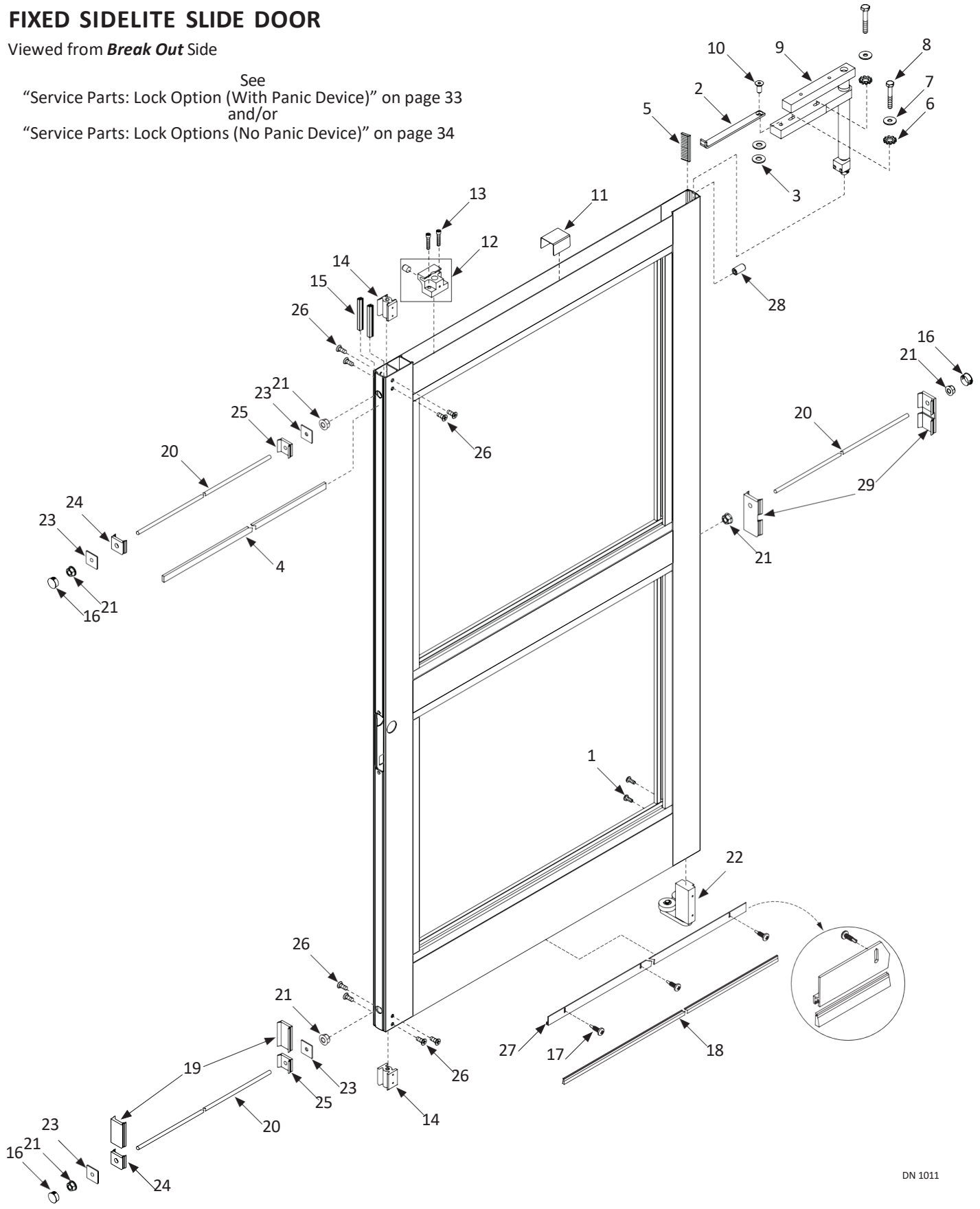

GT1175 (H105) Fixed Slide Door			
Item	**Part**	**Finish/Sizes/Notes**	**Description**
1	T-00027		PHMS,10-32x0.500L.,PHIL.ZINC
2	M-00704		ARM, LIMIT, MEDIUM STILE
3	T-00092		WASHER,.438 ID,1.00 OD,.083 THK,ZINC
4	M-00282		FLEXIBLE MAGNETIC STRIP
5	M-00695		BRUSH, NYLON, .56 L
6	T-00087		WASHER, LOCK, EXT, 1/4 ID, ZINC
7	T-00029		WASHER,.250 ID,.563 OD,.049 THK,ZINC
8	T-00028		HHCS,1/4-20x1.750L.,GR5,ZINC
9	A-00323		ASM, CARRIER BAR, MEDIUM STILE HURRICANE
10	T-00093		FHCS,7/16-14x1.000L.,ZINC,W/ NYLON PATCH
11	M-00653		BRACKET, LIMIT ARM SUPPORT
12	A-00069		PANIC CATCH, BOTTOM
13	T-00037		SHCS,1/4-20x1.250L.,ZINC
14	M-00807		BLOCK, GUIDE, LOCKROD
15	M-00340		WEATHERING,PILE .37
16	V-00720		PLUG,HOLE,13/16 DOME
17	T-00222	Zinc, In Part Bag A-00623 & A-00624	PHSMS,6x0.500L.,PHIL,TEKS,ZINC
	T-00260	Black Zinc, In Part Bag A-00623 & A-00624	PHSMS,6x0.500L. PHIL,TEKS BLK ZN
18	M-01526		BRUSH,NYLON,1 LG
19	M-00880		CLIP, RAIL, 2.9” LONG
20	M-00272		3/8-16 THREADED ROD
21	T-00025		NUT,WHIZLOCK,3/8-16,ZINC
22	A-00345	RH, In Part Bag A-00623 & A-00624	ASM, LOWER PIVOT, FSRH, HURRICANE
	A-00346	LH, In Part Bag A-00623 & A-00624	ASM, LOWER PIVOT, FSLH, HURRICANE
23	M-00422		PLATE,TIE ROD
24	M-00870		CLIP, RAIL, .391 HOLE
25	M-00871		CLIP, RAIL, .500 HOLE
26	T-00176		FHMS,10-32x0.500L.,PHIL,UCUT,23-PT,ZINC
27	M-60278	Order by Length, Clear	HOLDER,WEATHERING BRUSH,204,EXTRU
	M-70278	Order by Length, Dark Bronze	HOLDER,WEATHERING BRUSH,313,EXTRU
	M-90278	Order by Length, Bone White	HOLDER:WEATHERING BRUSH:BW:EXTRU
28	T-00322	In Part Bag A-00623 & A-00624	SHSS,5/16-24x0.625L.,CUP PT.
29	A-01270		CLIP,RAIL,4 MUNTIN,.391 HOLE