Opus Overhead Concealed Swing Door GT (8)300 - (8)350 Installation Manual

P/N C-00175 Rev 12-12-22

NABCO Entrances Inc. S82 W18717 Gemini Drive Muskego, Wisconsin 53150
Phone: (877) 622-2694 Fax: (888) 679-3319 www.nabcoentrances.com
NABCO hours of Operation: Monday to Friday 8:00 a.m.- 4:30 p.m. (Central Time)

Associated Manuals Part Numbers: *Opus Control Wiring and Programming Manual; P/N C-00139*
Swing Door Owners Manual; P/N C-00110 (for Decal Installation)
NABCO Price Book; P/N 16-9244-30 (for Sensors, Switches, and Accessories)

WARNING

- **Turn OFF all power to the Automatic Door if a Safety System is not working.**
- **Instruct the Owner to keep all power turned OFF until corrective action can be achieved by a NABCO trained technician. Failure to follow these practices may result in serious consequences.**
- **NEVER leave a Door operating without all Safety detection systems operational.**

Table of Contents

CHAPTER 1: WARNING LABELS 3

CHAPTER 2: GENERAL SAFETY RECOMMENDATIONS 3

CHAPTER 3: SCOPE 4

SECTION 3.1: To the Installer 4
SECTION 3.2: Objective 4
SECTION 3.3: Request a User Name/Password to gain access into the “myNABCO” portal 4
SECTION 3.4: Associated Video QR Code Link 4

CHAPTER 4: GETTING STARTED. 4

SECTION 4.1: Types of Swing Doors 4
SECTION 4.2: Handing 5
SECTION 4.3: Door Frame Specifications 5

CHAPTER 5: BEFORE ASSEMBLING DOOR FRAME 6

SECTION 5.1: Inspect the Rough Opening 6
SECTION 5.2: Remove the Header Cover 6

CHAPTER 6: PREP THE JAMB TUBES. 6

CHAPTER 7: INSTALL THE SIDELOAD HEADER TO JAMB TUBES 7

SECTION 7.1: Assemble Door Frame 7

CHAPTER 8: INSTALL BOTTOM LOAD HEADER TO JAMB TUBES 7

SECTION 8.1: Prep the Bottom Load Header 7

CHAPTER 9: INSTALL THE PANIC LATCH (INSWING DOORS ONLY). 8

CHAPTER 10: INSTALL THE DOOR STOP (OUTSWING DOORS ONLY). 9

CHAPTER 11: INSTALL THE HEADER TO JAMB TUBES 9
SECTION 11.1: Install Door Frame to Opening 10
SECTION 11.2: Install the Finger Guard. 11
CHAPTER 12: INSTALL BOTTOM LOAD COMPONENTS 11
SECTION 12.1: Secure Incoming Wires 12
SECTION 12.2: Install Motor/Operator into Header 12
SECTION 12.3: Install the Opus Control 12
CHAPTER 13: 120 VAC GENERAL WIRING 13
CHAPTER 14: HANDING 14
SECTION 14.1: How to Determine Handing 14
SECTION 14.2: Install the Handing Harness (for Right Handed Units only) 14
CHAPTER 15: INSTALL THE FLOOR PIVOT 15
CHAPTER 16: INSTALL THE SWING DOOR (PROVIDED BY NABCO) 16
CHAPTER 17: INSTALL THE SWING DOOR (NOT PROVIDED BY NABCO) 16
SECTION 17.1: Install the Top Door Pivot Receiver 16
SECTION 17.2: Install the Bottom Door Pivot Receiver 18
SECTION 17.3: Install the Swing Door 20
CHAPTER 18: ADJUST THE SWING DOOR HEIGHT 20
CHAPTER 19: INSTALL THE SWING ARM 21
CHAPTER 20: SWING DOOR SAFETY CHECK 23
SERVICE PARTS: BAG P/N A-00565 24
SERVICE PARTS: BAG P/N A-01406 24
SERVICE PARTS: BAG P/N A-01410 25
SERVICE PARTS: BAG P/N A-01411 25
SERVICE PARTS: OHC OPUS BOTTOM LOAD HEADER 26
SERVICE PARTS: OHC OPUS SIDE LOAD HEADER 29
SERVICE PARTS: SWING DOOR 32

CHAPTER 1: WARNING LABELS

Warning labels are universal and used to alert an individual of potential harm to one's self or to others. The following warning labels are listed in a hierarchy order that defines the most potential danger first, and the least potential danger last. Please refer to this page in the event that a warning label is displayed within this manual and further definition needs to be explained.

DANGER **Indicates potentially dangerous situations. Danger is used when there is a hazardous situation where there is a *high* probability of severe injury or death. It should not be considered for property damage unless personal injury risk is present.**

WARNING **Indicates a hazardous situation which has *some* probability of severe injury. It should not be considered for property damage unless personal injury risk is present.**

CAUTION **Indicates a hazardous situation which *may result in a minor injury*. Caution should not be used when there is a possibility of serious injury. Caution should not be considered for property damage accidents unless a personal injury risk is present.**

Attention: A situation where material could be damaged or the function impaired.

Notice: Indicates a statement of company policy as the message relates to personal safety or protection of property. Notice should not be used when there is a hazardous situation or personal risk.

Note: Indicates important information that provides further instruction.

CHAPTER 2: GENERAL SAFETY RECOMMENDATIONS

WARNING **Do not install, operate or service this product unless you have read and understand the General Safety Recommendations and Warning Labels contained in this manual. Failure to do so may result in bodily injury or property damage.**

WARNING **Read, study and understand the installation and operating instructions contained in or referenced in this manual before operating. If you do not understand the instruction, ask a qualified technician. Failure to do so may result in bodily injury or property damage and will nullify all warranties.**

DANGER **Disconnect all power to the junction box prior to making any electrical connections. Failure to do so may result in serious personal or fatal injury. When uncertain whether power supply is disconnected, always verify using a voltmeter.**

DANGER **Do not place finger or uninsulated tools inside the electrical controller. Touching wires or other parts inside the enclosure may cause electrical shock, serious injury or death.**

CAUTION **The Ground wire from the Opus Control 120 VAC Harness, and the Incoming 120 VAC Ground wire must be connected to the Ground screw located within the Swing door Header.**

CAUTION **If the door appears broken or does not seem to work correctly, it should be immediately removed from service until repairs can be carried out or a qualified service technician is contacted for corrective action.**

Notice: This manual, the owner's manual and all other associated manuals must be given to and retained by the purchasing facility or end user.

Notice: Wiring must meet all local, state, federal or other governing agency codes.

Notice: All electrical troublshooting or service must be performed by qualified electrical technicians and must comply with all applicable governing agency codes.

CHAPTER 3: SCOPE

SECTION 3.1: To the Installer

The purpose of this manual is to familiarize the installer and purchaser with the proper installation and operation of this system. It is essential that this equipment be properly installed and operational before the door is used by the public. It is the installer's responsibility to inspect the operation of the entrance system to be sure it complies with any applicable standards. In the United States, ANSI Standard 156.10 (GT-300 and GT-8300), and ANSI Standard 156.19 (GT-350 and GT-8350) covers these types of doors and ANSI Standard Z97.1 covers Glass Installation. Other local standards or codes may apply. Use them in addition to the ANSI standard.

The OHC Header assembly can be purchased as a stand alone unit and may be installed on other makes of doors and frames in lieu of the NABCO Complete Swing Door System. The GT-300, GT-8300, GT-350 and GT-8350 OHC Swing Door series is designed inline with the frame as a concealed unit.

If after troubleshooting a problem, a satisfactory solution cannot be achieved, please call Nabco Entrances at 1-877-622-2694 between 8 am – 4:30 pm Central time for additional assistance.

The owner should determine that the door is operating properly and should immediately call for service if there is any malfunction. All installation changes and adjustments must be made by qualified, NABCO trained technicians.

SECTION 3.2: Objective

The GT-300, GT-8300, GT-350 and GT-8350 OHC swing door series is designed inline with the frame as a concealed unit. The door function is operated by the Opus Control. This manual offers step by step instructions.

CAUTION **A pedestrian Door that does not have Its glass sections installed at the Factory shall specify that the glazing material employed is to comply with the requirement in UL 325 par.30.5.1:**

"The glazing material in both fixed and sliding panels of all sliding doors and in all unframed swinging doors shall comply with the requirements in the Performance Specifications and Methods of Test for Safety Glazing Material Used in Buildings, ANSI Z97.1. Glazing material for other pedestrian doors shall also comply with ANSI Z97.1, except that single strength or heavier glass may be used for those portions of doors involving a glazed area of less than 1ft^2 (0.9 m^2) and having no dimension greater than 18 in (457 mm)".

SECTION 3.3: Request a User Name/Password to gain access into the "myNABCO" portal

To gain access into the "myNABCO" portal, the User must first have an assigned User Name and Password. To request a User Name and Password, the following must be done:

1. Open the NABCO Website: www.nabcoentrances.com
2. Enter the "myNABCO" portal → Request Access → Fill out the Request Access Form → Click onto Register
   a. A User Name and Password will be emailed back to the requestor.

SECTION 3.4: Associated Video QR Code Link

How to locate Service Parts Pages on the NABCO website		**Android Phone Instruction to Scan QR Code** *Note: Scanning QR Links using an Android Phone may vary.* 1. Google to download QR Scanner. Install. 2. Place phone in front of QR Code. Scan. **I-Phone Instruction to Scan QR Code** 1. Click on Camera icon. 2. Place phone in front of QR Code. Scan.

CHAPTER 4: GETTING STARTED

SECTION 4.1: Types of Swing Doors

4.1.1 Full Automatic

- Utilize Sensor(s) to open a Swing door.
  - Sensors activate the Control by detecting motion of pedestrians (or moving objects) that come into range.
- Must be compliant with ANSI Standard Code 156.10 to reduce chance of injury to pedestrians and wheeled traffic.

4.1.2 Low Energy

- ▶ Utilize a Knowing Act to open a Swing door.
  - A conscious effort that is carried out in many different ways, including (but not limited to): manually opening/closing a Swing door; pressing various types of Push Plates; turning a Key switch; flipping a Rocker Switch; utilizing a keypad or card reader, etc.
- ▶ Must be compliant with the ANSI Standard Code 156.19 to reduce chance of injury to pedestrians and wheeled traffic.

Base Model	OHC Bottom Load	OHC Side Load
Full Automatic	GT300	GT8300
Low Energy	GT350	GT8350

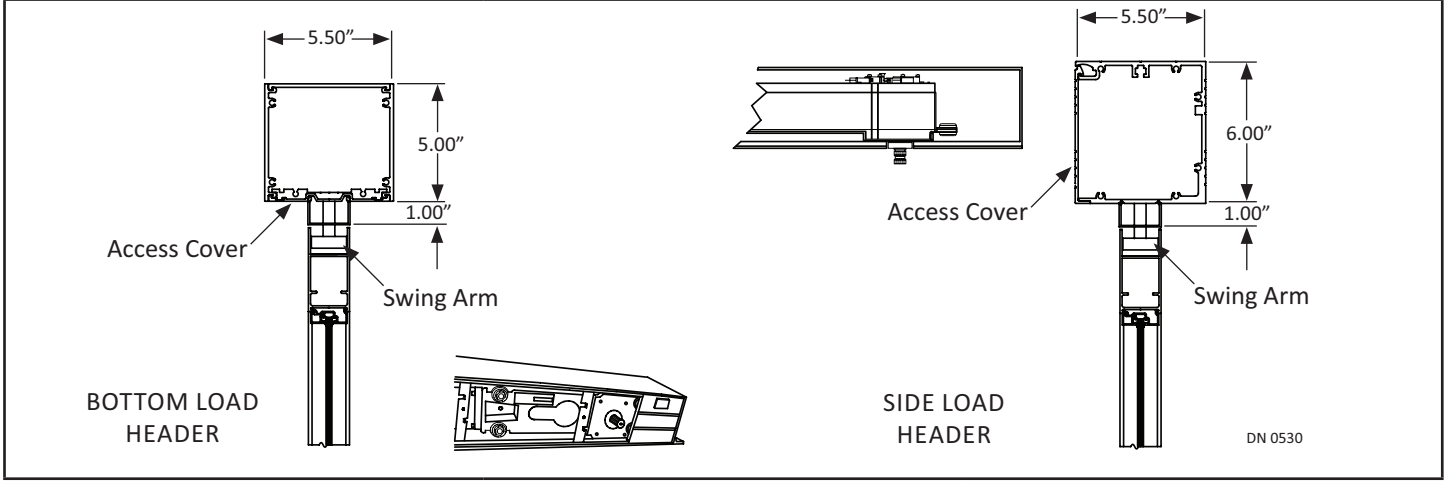

SECTION 4.2: Handing

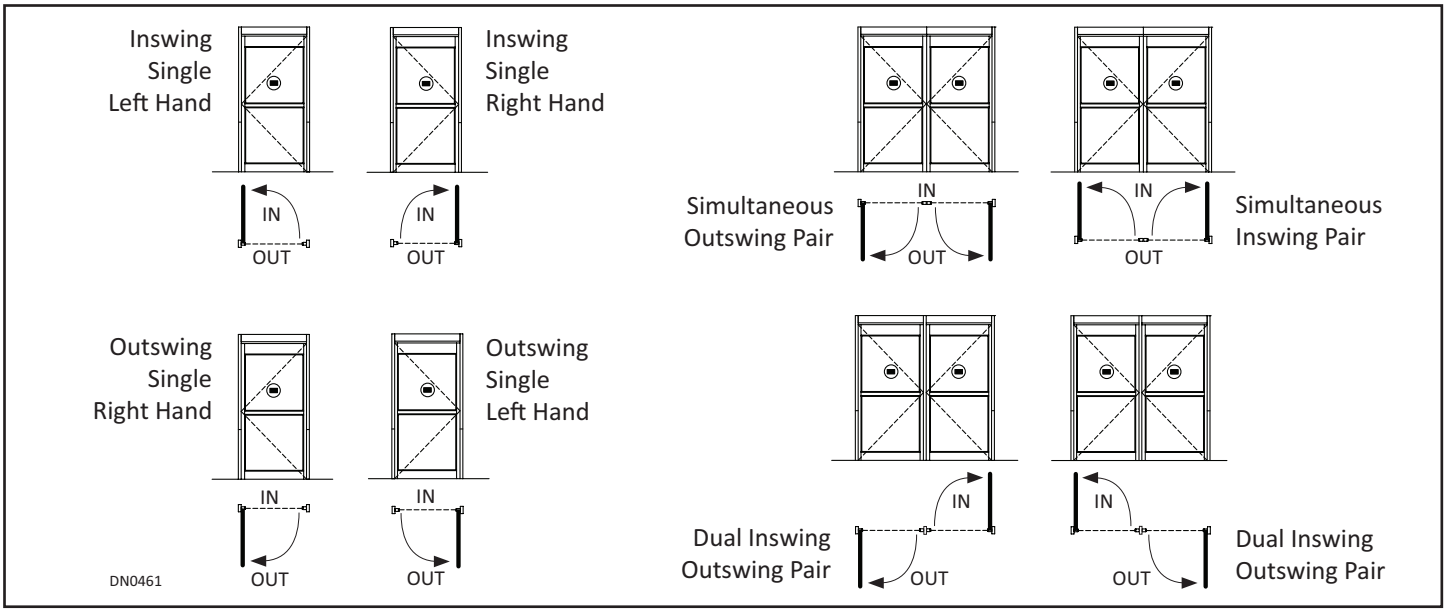

SECTION 4.3: Door Frame Specifications

Specification	Measurement	
Minimum Frame Face for Mounting	1-3/4 inches (44mm)	
Minimum Clearance from Top of Door to Ceiling	**Bottom Load**	**Side Load**
	6-1/8” (156 mm)	7-18” (181 mm)
Minimum Door Thickness	1-3/4 inches (44 mm)	

CHAPTER 5: BEFORE ASSEMBLING DOOR FRAME

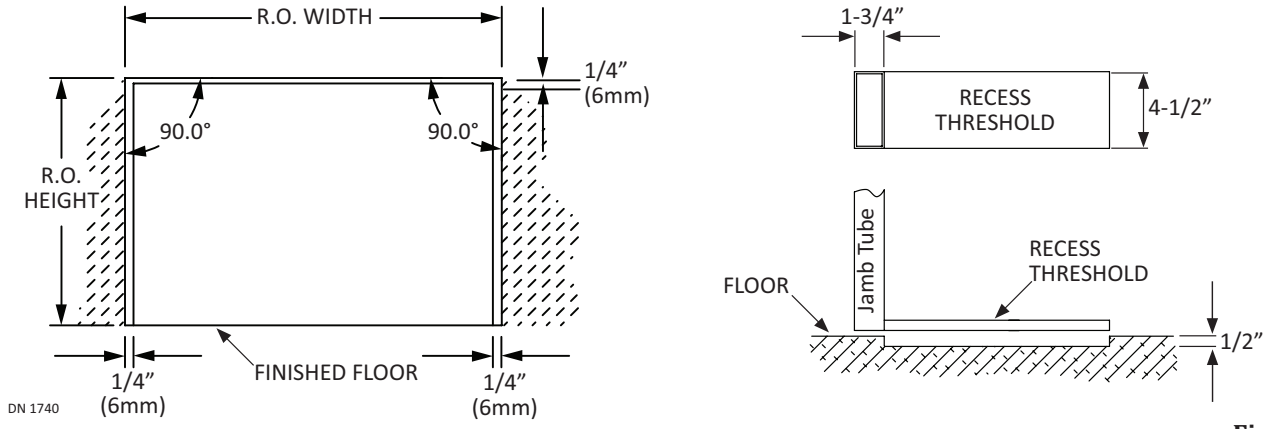

Figure 1

SECTION 5.1: Inspect the Rough Opening

1. Ensure the Rough Opening is correct size.
   - The width of the Rough Opening should equal: **PACKAGE WIDTH + 1/4 INCH ON EACH SIDE**
   - The height of the Rough Opening should equal: **PACKAGE HEIGHT + 1/4 INCH**

Note: Make allowances for tile or other existing materials that may change the floor height.

2. Ensure the floor is level across the entire opening. If used, check recessed threshold across the door opening.

SECTION 5.2: Remove the Header Cover

1. Remove (2) 8-32x0.625L Flat head screws. Remove Header Cover by lifting it up and then pulling it out.
2. Remove Parts boxes and/or Parts bags from inside Header.

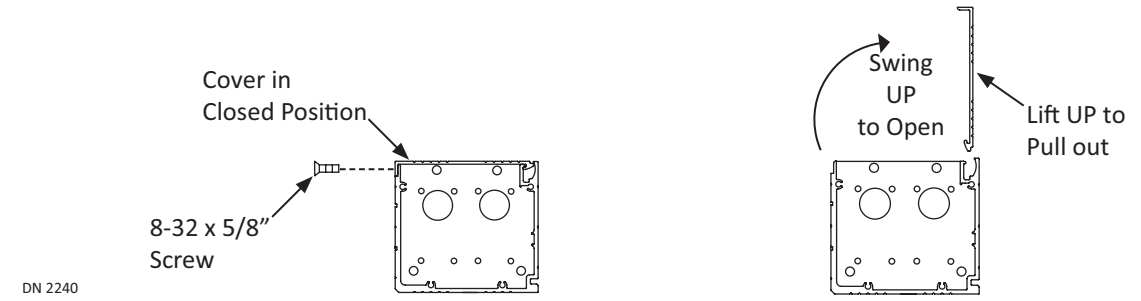

Figure 2

CHAPTER 6: PREP THE JAMB TUBES

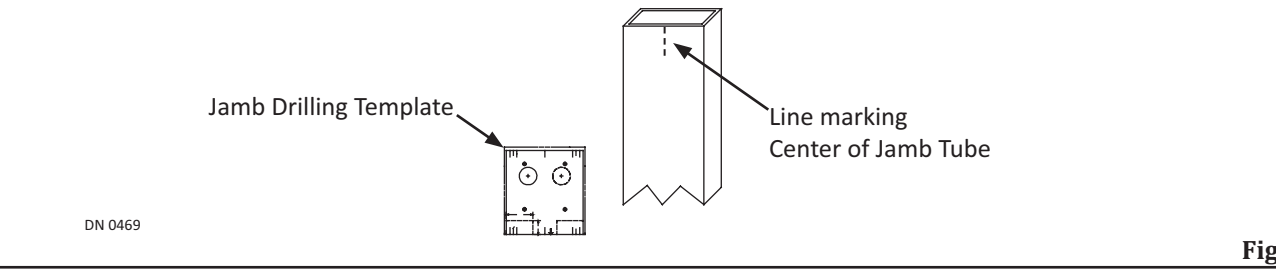

Figure 3

1. Measure the full height of existing Swing door.
2. Obtain (1) Jamb Drilling Template provided by NABCO.
3. Place the Jamb Drilling Template at the top of Jamb Tube so it is flush. Align the center to the previously drawn center mark.

4. Adhere the Jamb Drilling Template to each Jamb Tube. The Jamb Drilling Template is removable.
5. Drill (4) .391 diameter holes through (4) clearly marked (A)s on the Template. Countersink each screw hole.
6. Obtain (4) Rivnuts provided by NABCO. Install (1) Rivnut into each drilled .391 hole.
7. Drill (1) 1-1/4 inch diameter hole through (1 of 2) clearly marked (B)s on the Template to allow incoming 120 VAC Power.
   a. The 120 VAC incoming power must be routed through the Strike Jamb, only.
8. Remove the Template from the Strike Jamb, then adhere same Template to the Pivot Jamb. Repeat steps

CHAPTER 7: INSTALL THE SIDELOAD HEADER TO JAMB TUBES

SECTION 7.1: Assemble Door Frame

1. Determine which Jamb tube is the Pivot Jamb and the Strike Jamb.
   - ▶ Swing door pivots on side of Pivot Jamb.
   - ▶ Swing door locks on side of Strike Jamb.
2. Position each Jamb tube at both sides of the Header. Ensure the removable cover side of Header is facing up.
3. Orientate the frame in relation to the outside of building/room.
4. Removable Cover side of Header must face the Interior side of building.

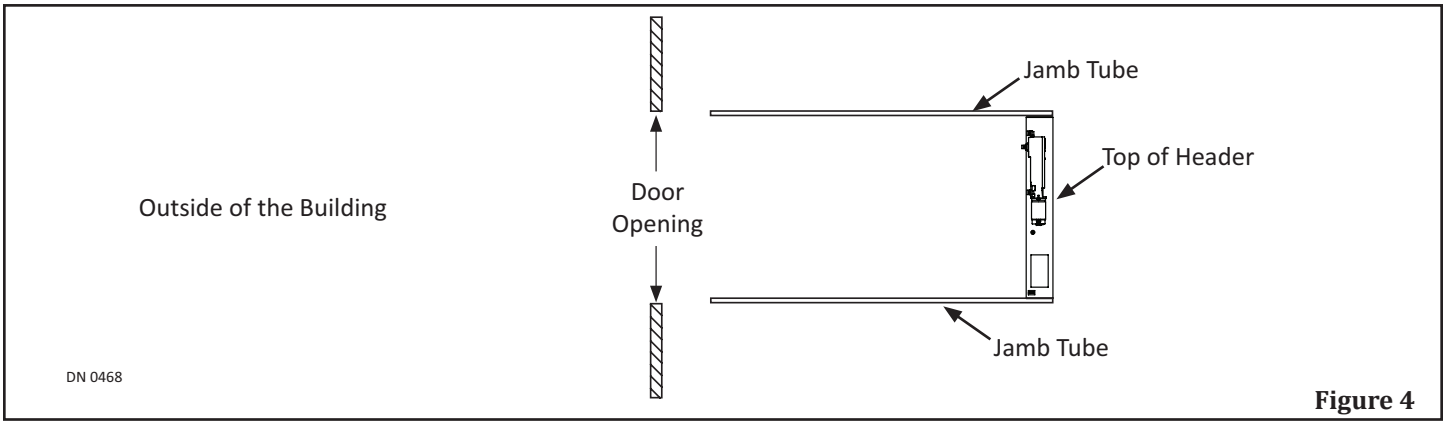

Figure 4

5. Secure Header to both Jamb Tubes with Anchors that are appropriate for the type of substrate being fastened into. Anchors are not provided by NABCO**.**

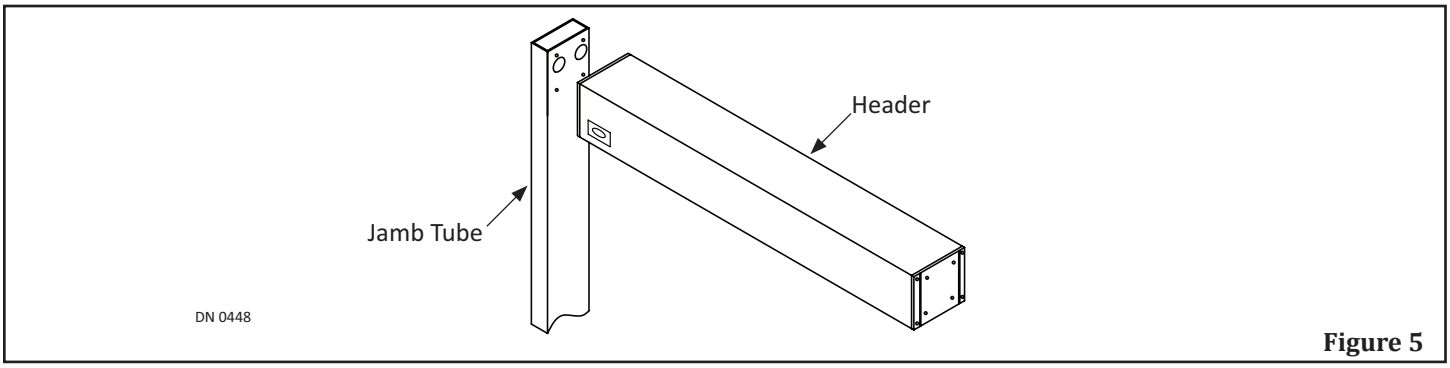

Figure 5

CHAPTER 8: INSTALL BOTTOM LOAD HEADER TO JAMB TUBES

SECTION 8.1: Prep the Bottom Load Header

1. Place Header on flat surface with Bottom facing up. Protect Header from scratches.
2. Remove #10-24 x 3/4 inch screws and Dress Plate. Set aside.
3. Mark the locations of each Lock Cover Plate to ensure it is reinstalled in the correct position.
4. Remove Lock Cover Plates from bottom of Header, then boxes and/or parts bags from inside Header. Set Aside.

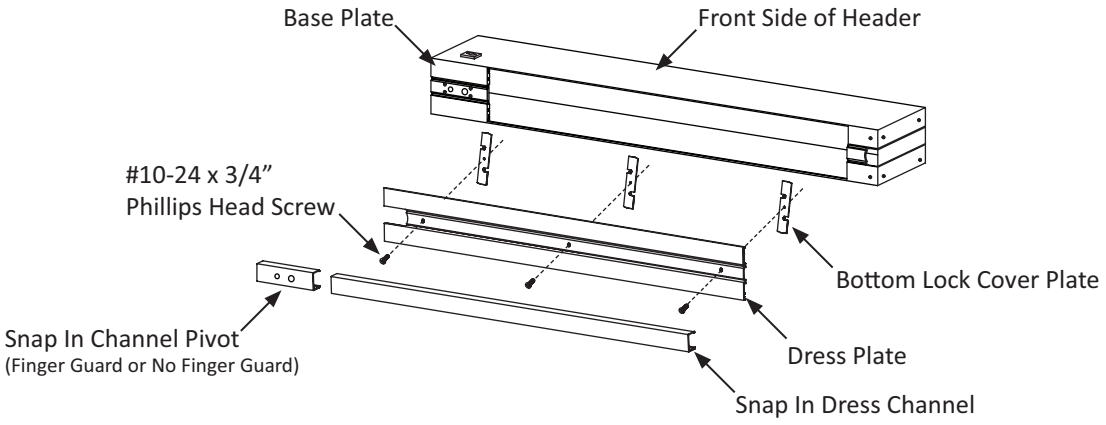

Figure 6

CHAPTER 9: INSTALL THE PANIC LATCH (INSWING DOORS ONLY)

- During Automatic Operation: The Inswing door opens to the Interior side of the building/room. The Panic Latch is then used as a Door Stop.
- During Emergency Operation: The Inswing door is manually pushed Out to the exterior side of the building/room (not to exceed 50 pounds of pressure; per ANSI code). The Panic Latch flips to allow emergency egress and immediately shuts the Swing door OFF.

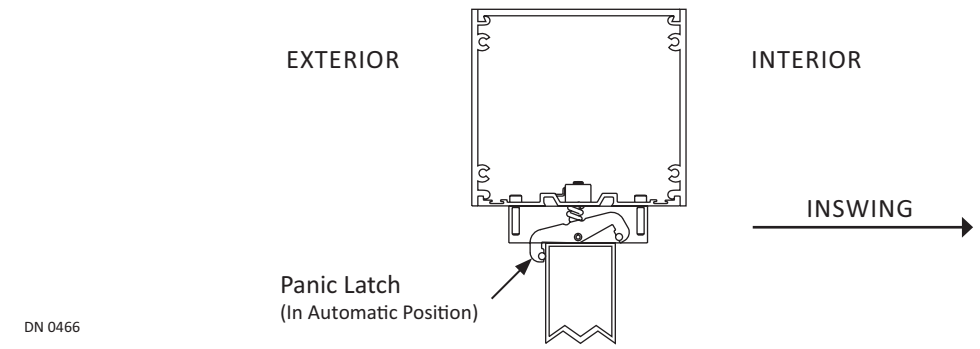

Figure 7

1. Obtain the Panic Latch. Remove (4) Socket Head Cap Screws and (4) Washers. Set aside.
2. Turn the Panic Latch so the (EXT→) (exit arrow) points to the Exterior side of the Building. Failure to do so, will install the Panic Latch backwards.

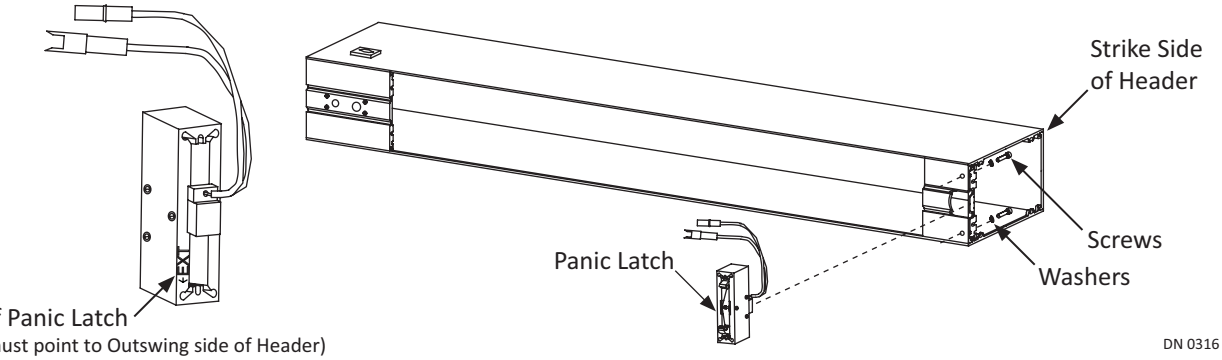

Figure 8

3. Go to the bottom, Strike side of Header.
4. Insert the Panic Latch wires and spring coil into the opening until the Panic Latch butts up against the Header.
   a. For wiring instructions please refer to P/N C-00139 Opus Wiring and Programming Manual.

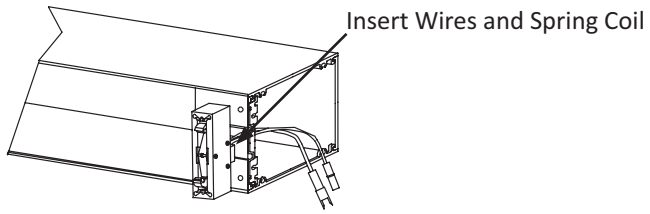

Figure 9

5. Secure the Panic Latch from inside the Header with (2) Socket Head Cap Screws and (2) Washers.
   a. Do Not wire or test the Panic Latch at this time.

CHAPTER 10: INSTALL THE DOOR STOP (OUTSWING DOORS ONLY)

Note: The Door Stop is installed at the NABCO Factory.

The Swing door automatically closes after it has been opened. the Door Stop is utilzed to stop the door from swinging past the fully closed position.

1. Obtain the Door Stop.
2. Remove (4) Socket Head Cap Screws and (4) Washers. Set aside.
3. Go to the bottom, Strike side of Header.
4. Butt the Door Stop against the underside of the Strike Base, so the Stop end of Door Stop is facing the non-swing side of Header.
5. Secure Door Stop from inside Header with (2) Socket Head Cap Screws and (2) Washers.

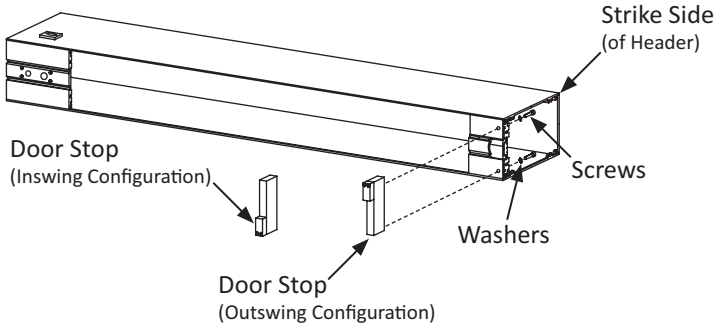

Figure 10

CHAPTER 11: INSTALL THE HEADER TO JAMB TUBES

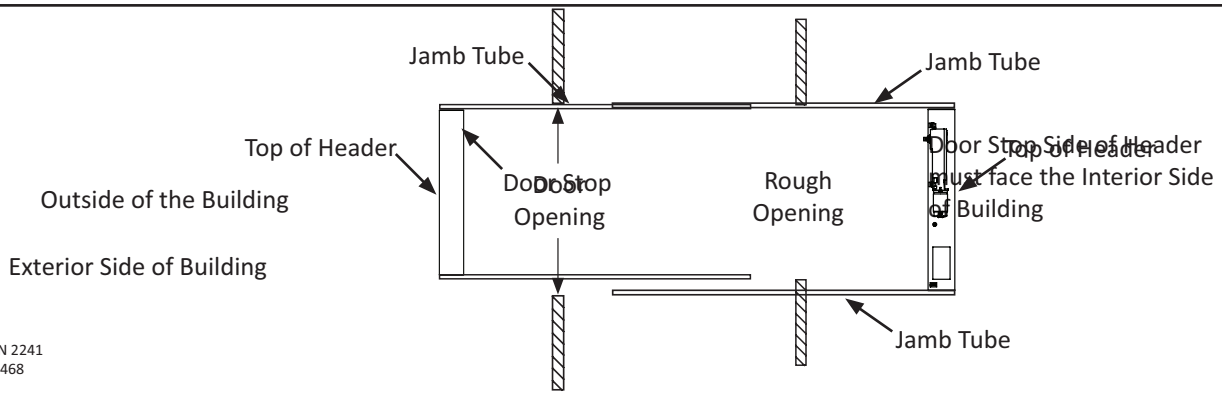

Figure 11

1. Determine which Jamb tube is the Pivot Jamb and the Strike Jamb.
   - Swing door pivots on side of Pivot Jamb.
   - Swing door locks on side of Strike Jamb.

2. Position each Jamb tube at both sides of the Header.
3. Orientate the frame in relation to the outside of building/room.
   a. The Door Stop side of Header must face the Interior side of building.
4. Secure Header to both Jamb Tubes with Anchors that are appropriate for the type of substrate being fastened into. Anchors are not provided by NABCO.

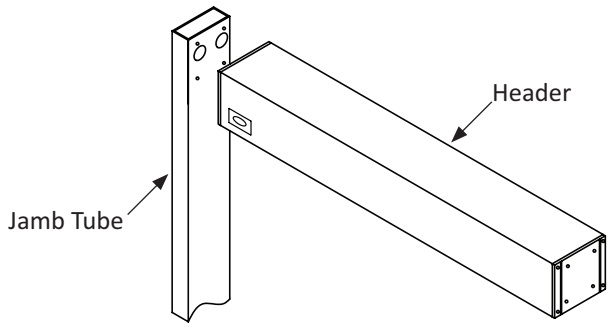

Figure 12

SECTION 11.1: Install Door Frame to Opening

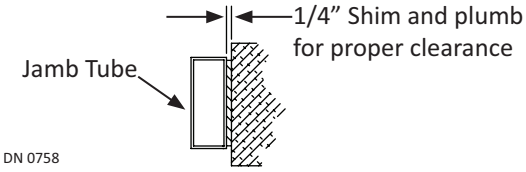

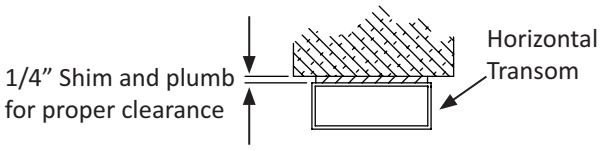

Figure 13

Note: Incoming 120 VAC Power wires must be pulled through the Strike end of Header for a single Swing door or the middle of Header for a simultaneous pair Swing door. It is recommended to install wires within an Electrical conduit.

1. Lift to position the assembled Frame into the rough opening. Insert all incoming wiring through the 1-1/4 inch Access Hole located on the Strike side of Header.
2. Plumb Jamb tubes in both planes to ensure the rough opening allows a 1/4 inch clearance. Shim back of Jamb as required.
3. Plumb the Header at the top to ensure the rough opening allows a 1/4 inch clearance. Shim top of Header as required.

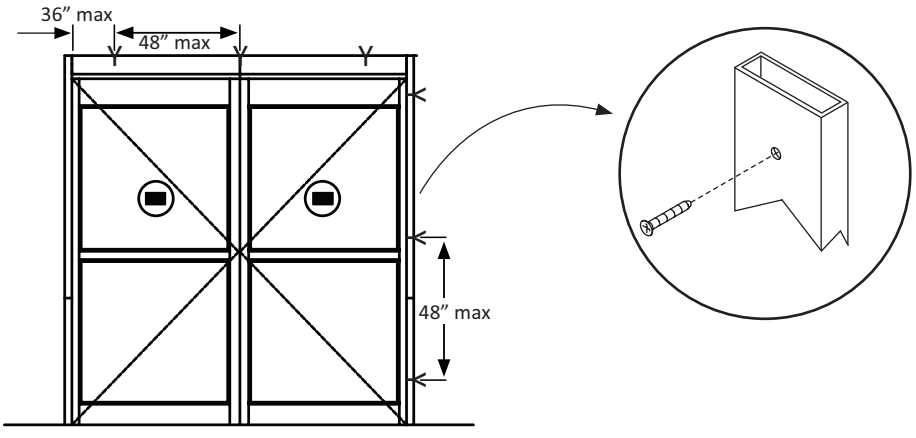

Figure 14

Attention: Anchors must be appropriate for the type of substrate being fastened into. Anchors are not provided by NABCO.

Note: It is recommended to countersink holes as required to flush the surface.

Note: It is recommended to drill tap threads for anchors in a steel or aluminum structure.

4. Secure the Frame with Anchors not provided by NABCO.

SECTION 11.2: Install the Finger Guard

Note: Anchors must be appropriate for the type of substrate being fastened into. Screws are not provided by NABCO.

Note: Do not overtighten screws to prevent deforming Weatherstrip Extrusion. Ensure each screw is flush to the Jamb tube.

1. Go to the top of the Pivot Jamb tube, at the center, drop a Plumb Line to the floor.
2. Mark the Center line on the inside face of the Pivot Jamb Tube. It is recommended to use a level.
3. Insert the Weather Strip into both channels located on the Finger Guard Mounting Plate.
   a. Spraying silicone (not included) inside the Channels may ease the insertion of the Weather Strip.

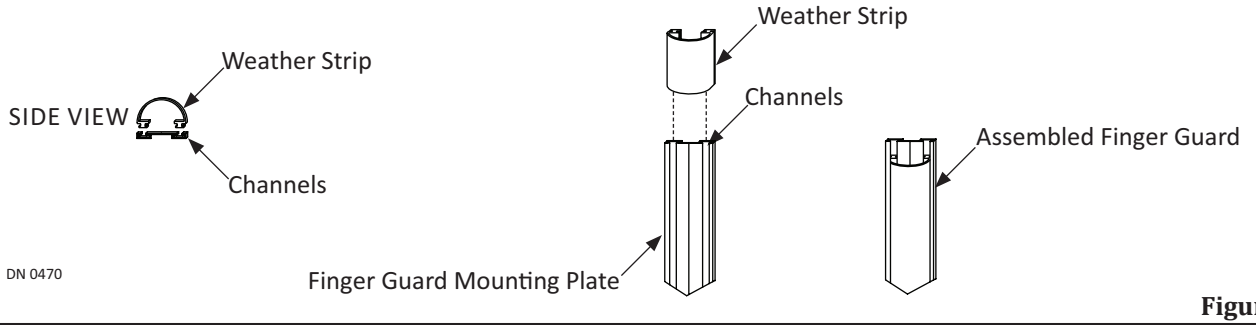

Figure 15

4. Line up the Center Notch located down the full length of the Finger Guard Mounting Plate, with the Center Mark located on the Pivot Jamb Tube. It is recommended to use a level.
5. Drill (3-4) 1/4 inch evenly spaced screw holes down the Finger Guard Assembly.
   a. Each screw hole must go through the Weather Strip, Mounting Plate and the Pivot Jamb Tube.
6. Secure the Finger Guard Mounting Plate onto the Pivot Jamb with 1/4 x 1 inch self tapping Screws (zinc or steel plated).

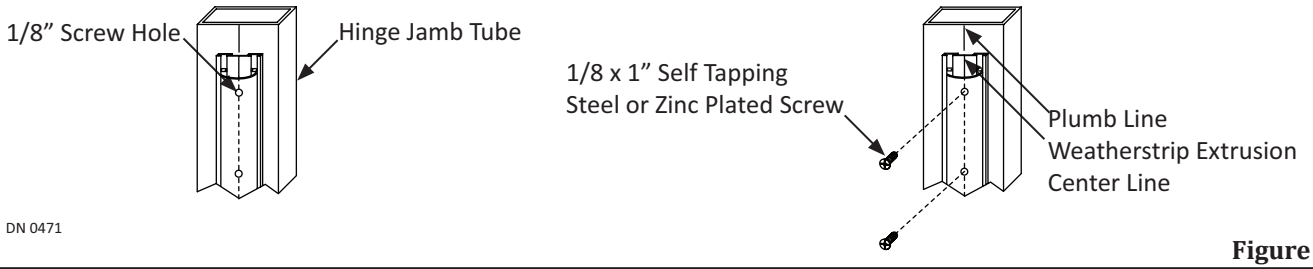

Figure 16

CHAPTER 12: INSTALL BOTTOM LOAD COMPONENTS

Note: Location of Contents within Header are subject to change according to Swing door specifications.

Example Shows components that are installed inside Header.
The installation placement of components will be different

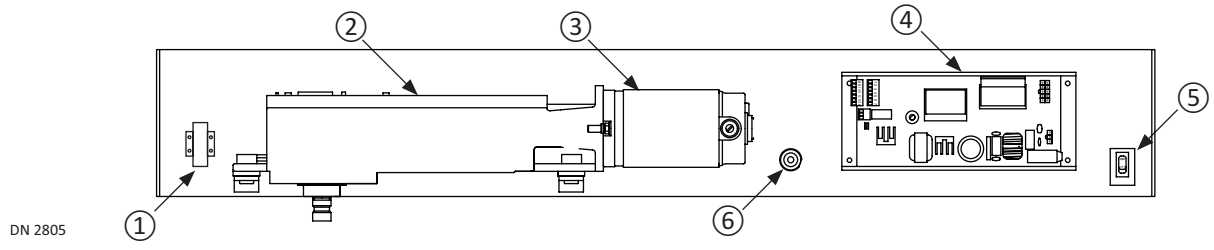

Figure 17

1. Transformer (Optional)
2. Operator
3. Motor
4. Opus Control
5. Power Switch
6. Ground Screw

SECTION 12.1: Secure Incoming Wires

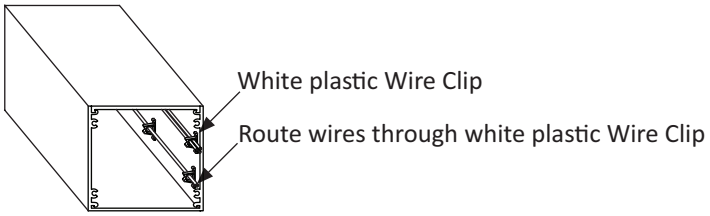

Figure 18

Note: In the event 120 VAC Power wires must be installed from Hinge Side of Header, ensure that wires are securely clipped, to prevent pinching of the wires during the Motor/Operator installation process.

1. Adhere each (self sticking) Wire Clip to the sides of Header (near the top). Insert wiring (as deemed necessary).
   a. 120 VAC Power wires must be routed separate from other wiring, to prevent pinching.

SECTION 12.2: Install Motor/Operator into Header

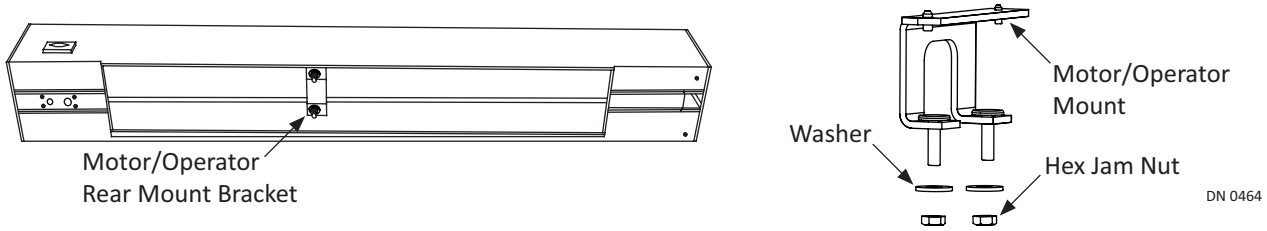

Figure 19 Remove Hardware from Mount

2. Go to (inside) top of Header. Locate the Rear Mount Bracket.
3. With a 9/16 inch Deep Well Socket and Ratchet, remove (2) 3/8-16 Hex Jam Nuts and (2) Washers from (2) studs that extend downward from the Rear Mount Bracket. Set aside.
4. Hold the Front end of Motor/Operator at an upward angle to slide Front Mount onto (2) Pivot Base Tabs located inside of Header.
5. Lift the rear of the Motor Operator up onto (2) studs extending downward.
   a. Ensure the Switch Harness is tucked between the back wall of Header and above the Mounting Bracket.
6. Secure the Motor/Operator with (2) 3/8-16 inch Hex Jam Nuts and (2) 7/16 x 1 inch Washers.
   a. It is important not to pinch any wiring during the Motor/Operator installation.

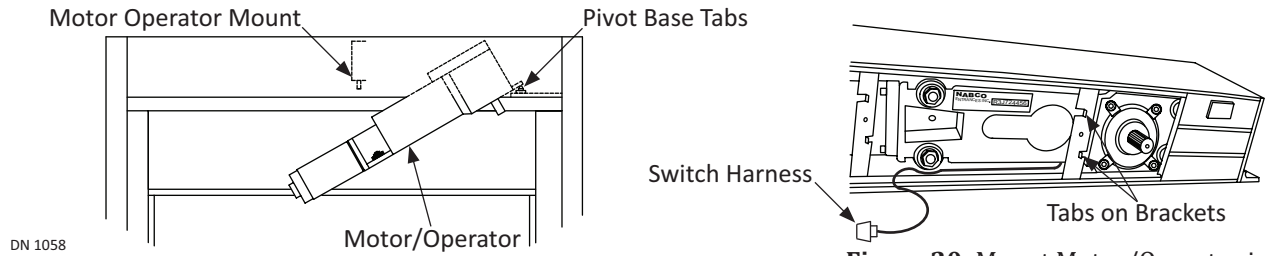

Figure 20 Mount Motor/Operator into Header

SECTION 12.3: Install the Opus Control

1. Obtain the Opus Control assembly. Locate where the Opus Control needs to be installed within the Header.
2. Insert the Opus Control with the Mounting Bracket at a 90 degree angle (Control will approximately be at a 4 degree angle).
3. Rotate the Opus Control until each side of the Mounting Bracket slides into each Channel located at the top; inside Header.
4. Secure the Mounting Bracket to the Header by tightening (2) 10-24x.875 inch Socket Head Cap screws, until the tip butts against the inside wall of the Header.

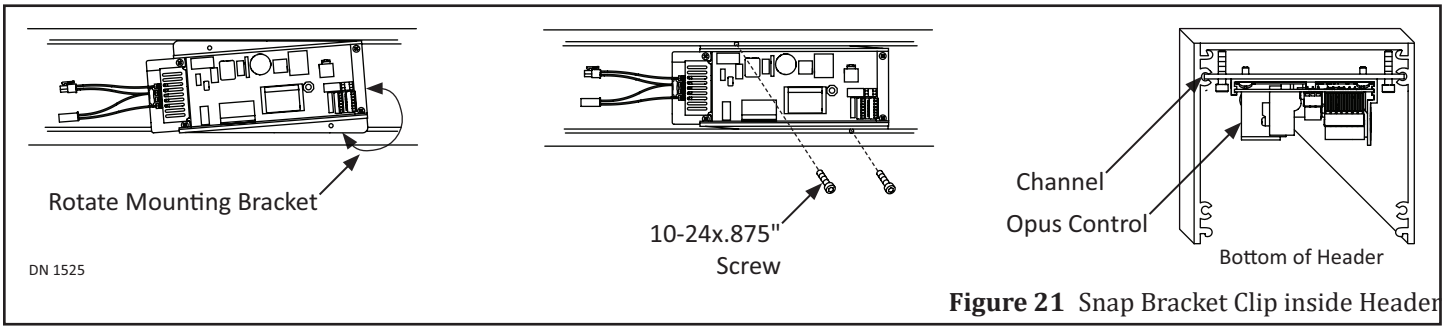

Figure 21 Snap Bracket Clip inside Header

CHAPTER 13: 120 VAC GENERAL WIRING

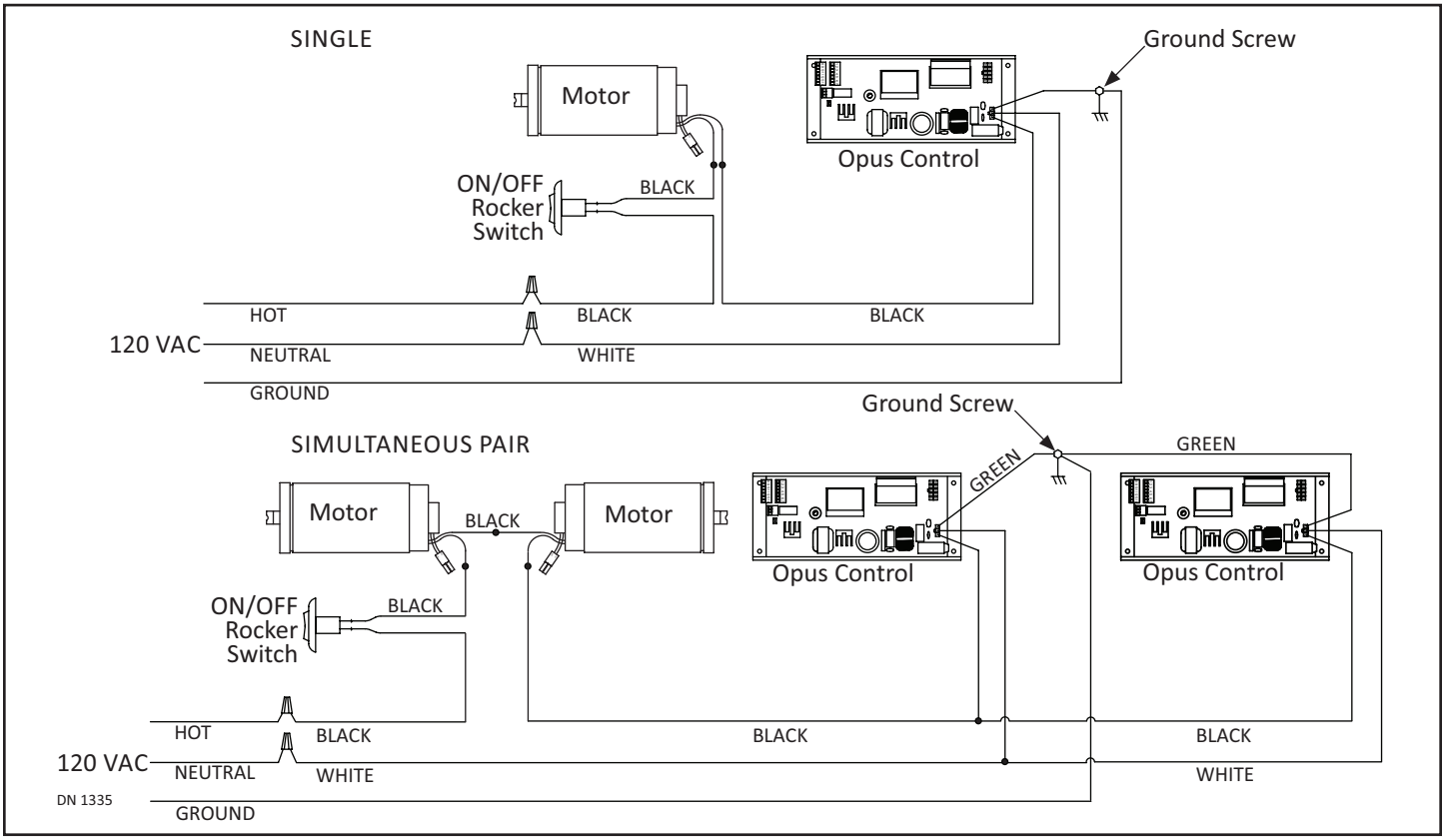

DANGER **Disconnect power to the junction box prior to making any electrical connections. Failure to do so may result in serious personal or fatal injury. When uncertain whether power supply is disconnected, always verify using a voltmeter.**

WARNING **All high voltage electrical connections must be made by licensed electricians according to National and Local electrical codes/regulations.**

CAUTION **Permanent wiring shall be employed as required by local codes.**

CAUTION **Electrical circuit to Nabco operator must not be not shared with other equipment such as lighting, cash registers, or any device that might cause electrical interference on the circuit.**

CAUTION **Keep sufficient spacing between high-voltage and low-voltage wiring. 120 VAC Power wires must be routed (separate from other wiring) located near the top of inside Header.**

CAUTION **Ensure that incomming electrical ground is properly secured to the grounding screw or grounding wire, whichever is provided.**

Notice: Wiring must meet all local, state, federal or other governing agency codes.

Attention:
- **Electrical circuit to Nabco operator must not be not shared with other equipment such as lighting, cash registers, or any device that might cause electrical interference on the circuit.**
- **Insert all Incoming 120 VAC Power wires into the pre drilled Electric Service Access Hole located at the left or right side of Header End Cap.**

CHAPTER 14: HANDING

SECTION 14.1: How to Determine Handing

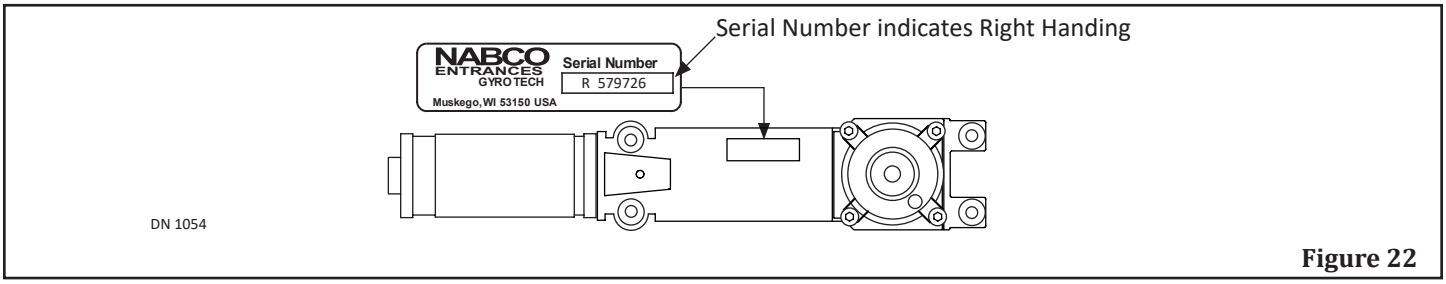

Figure 22

- Locate the Serial Number underneath the Operator. The Letter (L) or (R) located in front of the Serial Number indicates the Handing.

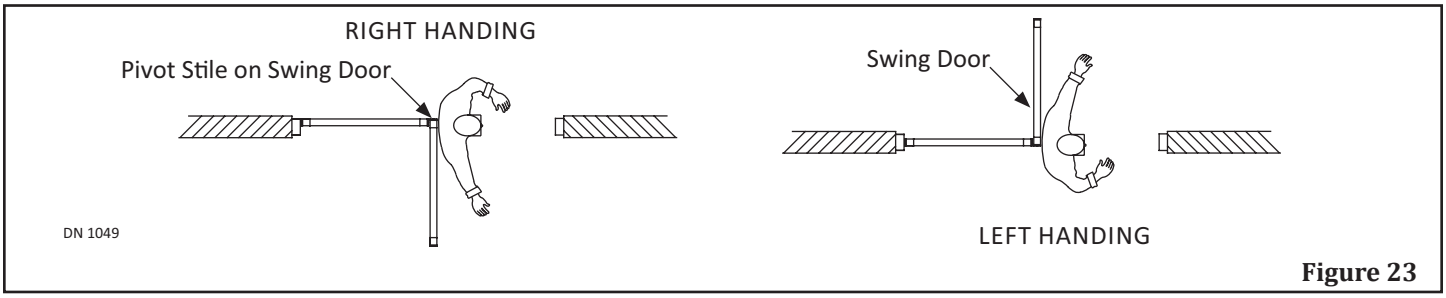

Figure 23

- Stand underneath the Header and open the Swing door. Butt your back against the Pivot side. Swing out your (right or left) arm in the direction the Swing door opened. If you swing out your Right Arm the Swing Door is Right Handed. If you swing out your Left arm the Swing Door is Left Handed.

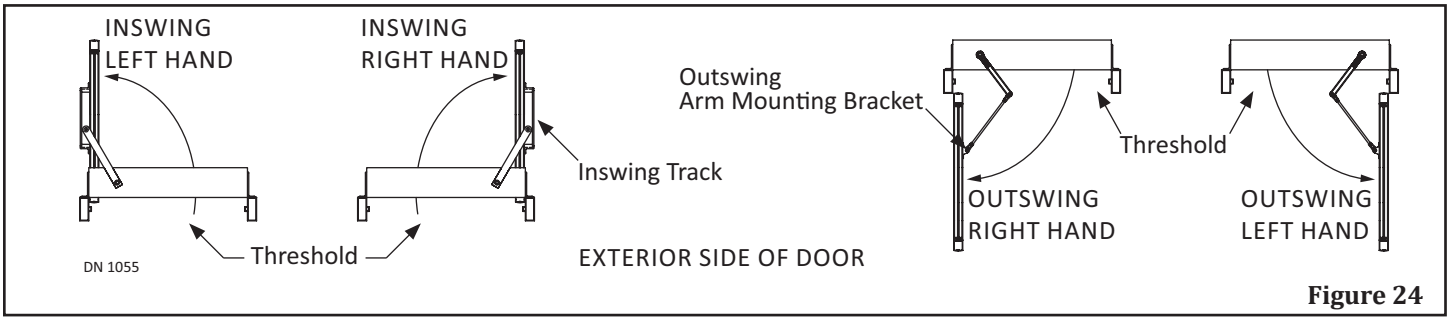

Figure 24

- If the Door swings underneath the Header to open, it is an Inswing Unit, and vice versa.

SECTION 14.2: Install the Handing Harness (for Right Handed Units only)

1. Obtain the Handing Harness. Connect the (Break Module Harness) Female Pin to the Male Pin Housing (Handing Harness).
2. Connect the (Break Module Harness) Male Pin Housing to the Female Pin (Handing Harness).

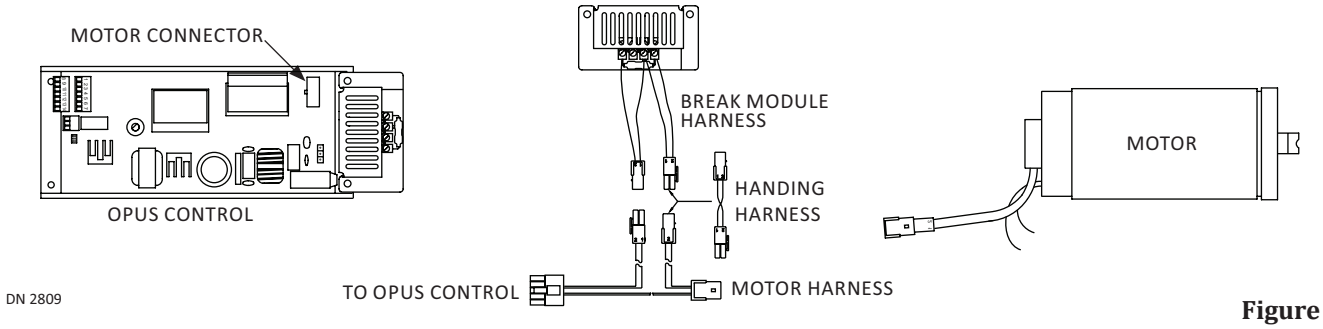

Figure 25

CHAPTER 15: INSTALL THE FLOOR PIVOT

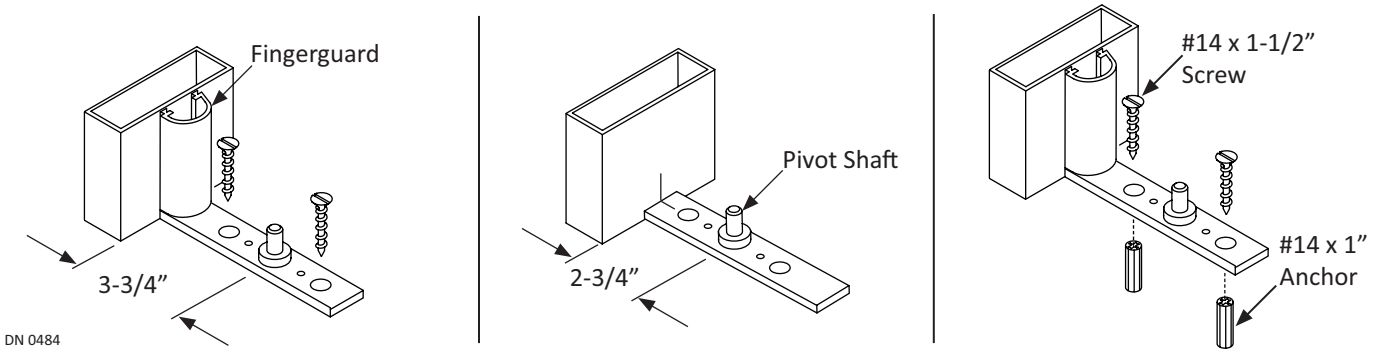

Figure 26 Ensure the Floor Pivot is Level

1. Measure the width of the inside Face of Jamb Tube. At the center, mark that spot.
2. Obtain the Floor Pivot:
   - For Units utilizing a Fingerguard; Turn the Floor Pivot so the Pivot Shaft is farthest away from the Jamb Tube.
   - For Units Not utilizing a Fingerguard; Turn the Floor Pivot so the Pivot Shaft is closest to the Jamb Tube.
3. Measure the width of the Floor Pivot. At the center, mark that spot.
4. Butt the Floor Pivot to the Pivot Jamb Tube (at the center marks). If done correctly:
   - With a Finger Guard; the Center of the Pivot will measure 3-3/4 inches away from the Pivot Jamb.
   - Without a Finger Guard; the Center of the Pivot will measure 2-3/4 inches away from the Pivot Jamb.
5. Drop a Plumb Line (down the center) from the (Top) Pivot to the (Floor Base) Pivot to align both Pivots.
6. Use the Floor Pivot as a template.
   1. Mark where the (2) largest screw holes are located.
   2. Remove the Floor Pivot. For each Mark, drill 1 inch deep holes into the Floor.
7. Insert (1) #14 x 1” Blue anchor into each hole.
8. Secure the Floor Pivot with (2) #14 x 1-1/2 inch Flat Head Screws.

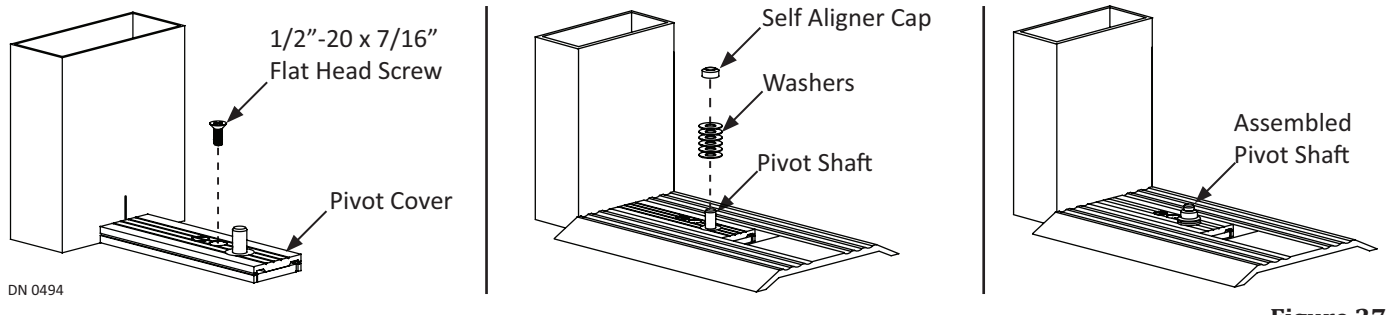

Figure 27

9. Secure the Threshold Cover to the Floor Pivot with (1) 1/2-20 x 7/16 inch Flat Head Machine Screw.
   a. Threshold Plate Covers are installed only if a Threshold is installed.
10. Lay the Saddle Threshold onto the floor so the cut out is on the same side as the Floor Pivot.
   a. Ensure the Saddle Threshold is square.
11. Do not permanently install the Saddle Threshold until the Swing Door is completely installed.

CHAPTER 16: INSTALL THE SWING DOOR (PROVIDED BY NABCO)

1. Go to the Top Pivot Assembly located inside the Header. Loosen the Set Screw located directly above the Pivot Shaft.
2. Go to the Self Riser screw located underneath the Pivot Shaft. Turn the Self Riser Screw counter-clockwise until the Pivot Shaft is completely retracted.

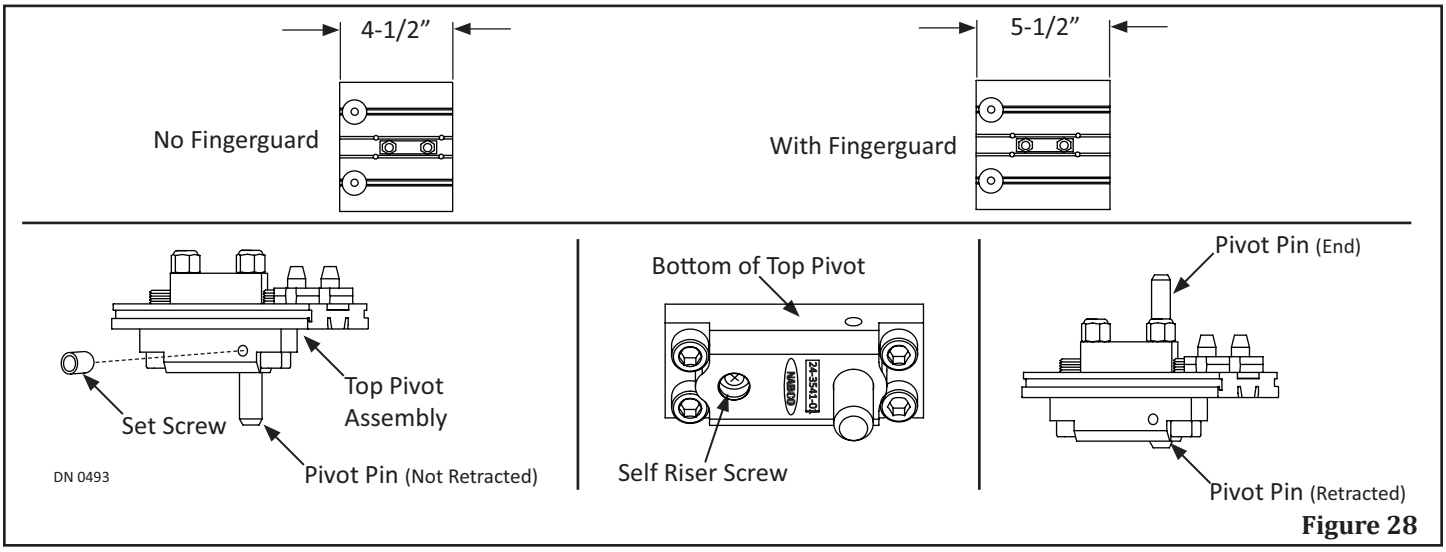

Figure 28

3. Go to the Bottom Pivot Assembly. Insert the Pivot Shaft into the Pivot Receiver.
4. Go inside the Header. With a flat head screwdriver, turn the Self Riser Screw clockwise until the Pivot Pin is inserted all the way down into the Bearing. Riser bar must be tight to the base pivot plate.
5. Tighten the Set Screw located directly above the Pivot Shaft.

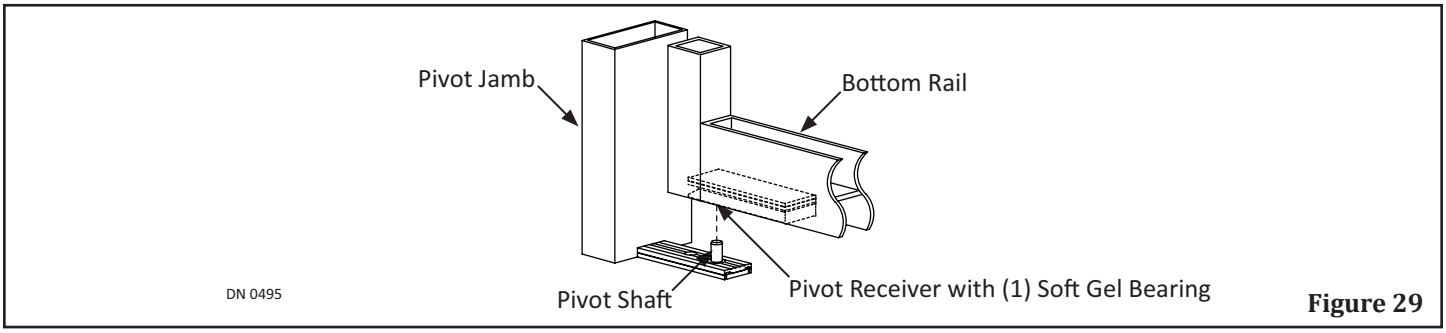

Figure 29

CHAPTER 17: INSTALL THE SWING DOOR (NOT PROVIDED BY NABCO)

Attention: No matter what Top Pivot is used (Shipped/not shipped by NABCO), the Top Pivot Shaft must always be aligned with the Bottom Pivot Shaft.

SECTION 17.1: Install the Top Door Pivot Receiver

1. Go to the Top Rail. Measure and mark the Horizontal Center all the way across the full width of the Web face.
   a. If the Horizontal Center measures less than 7/8 inches, the Door Rail may be too narrow for the Track to fit within.
2. Mill Out the extrusion material between the Web of Top Rail and Pivot Stile.
   a. The extrusion material must be milled out to match the width and depth of the Web.

3. Determine the location of the Center Pivot (measurement includes a 1/8 inch clearance for Door Swing).
   - ▶ For Doors ***without*** a Finger Guard: Measure 2-3/4 inches from the Pivot Jamb Tube towards the Strike Jamb Tube.
   - ▶ For Doors ***with*** a Finger Guard: Measure 3-3/4 inches from the Pivot Jamb Tube towards the Strike Jamb Tube.
4. Mark a vertical line across the horizontal line. This is the center of a (1/2) inch diameter hole.
   a. Ensure this measurement is aligned with Top Pivot Shaft.

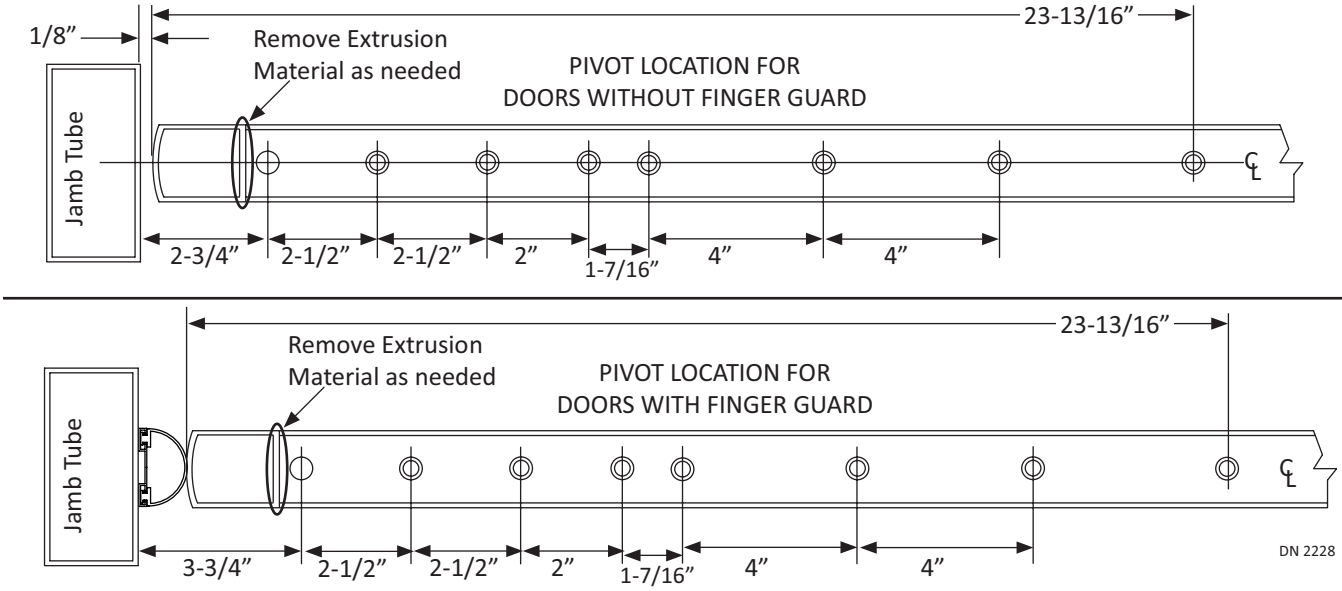

Figure 30

5. Place the Track inside the Top Rail. Center the (1/2) inch diameter hole with the Top Door Pivot Receiver located on the Pivot end of Track.
   a. If done correctly the center of Track will be aligned with the center mark drawn on the face of Web.
6. Use the Track as a template to mark (7) screw holes.
7. With a 25/64 drill (.391) diameter, drill (7) screw hole at the marked spots.
8. Countersink each screw hole to .53 diameter x 82 degrees.

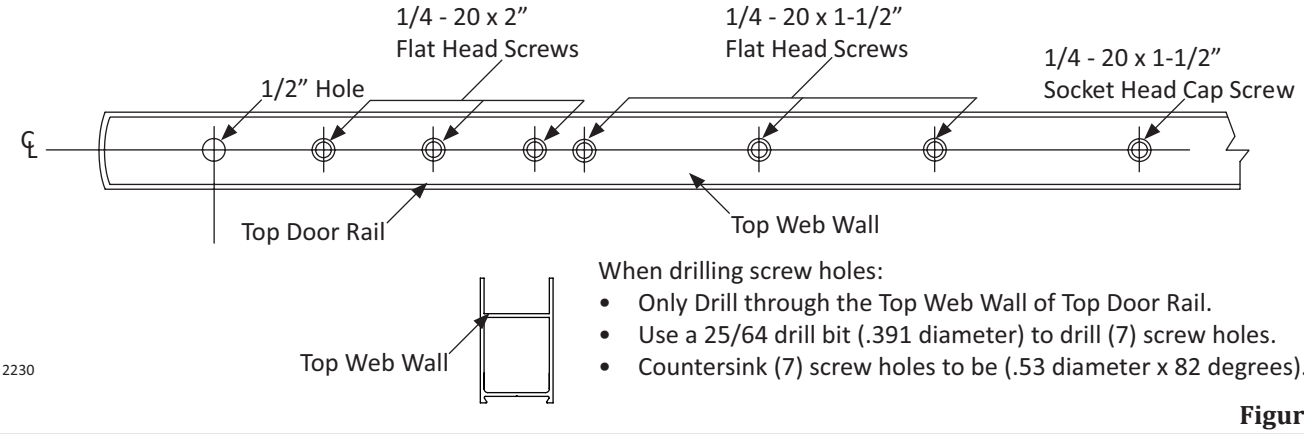

Figure 31

Attention: NABCO Entrances self-aligning Pivot requires a 5/8 inch minimum web depth within both the Top and Bottom Rails.

9. Insert (1) Riv Nut into each screw hole.
   a. Do Not insert a Riv Nut inside the (1/2) inch hole.

10. Measure the depth of the Web to determine which Spacer is needed:
    - 5/8 inch depth = no spacer is needed
    - 7/8 inch depth = use 1/4 inch spacer
    - 1 inch depth = use 3/8 inch spacer
    - 1-9/16 inch = use (2) 3/8 inch spacers; plus 3/16 inch spacer
11. Lay the appropriate Spacer into the Web of Top Rail. Align the screw holes.
12. Place the Track onto the Spacer accordingly (or the Top Web Wall).
13. Place (1) 5/8 " x 1/16" Side Spacer on either side of the Track.
    a. Side Spacers are used to ensure proper centering of Track.
14. Starting from the Pivot Side, secure the Track to the Top Rail with:
    - (3) 1/4-20 x 2inch Screws
    - (3) 1/4-20 x 1-1/2 inch screws
    - (1) Lock Washer placed under (1) 1/4-20x1-1/2 inch screw (for the Slot)

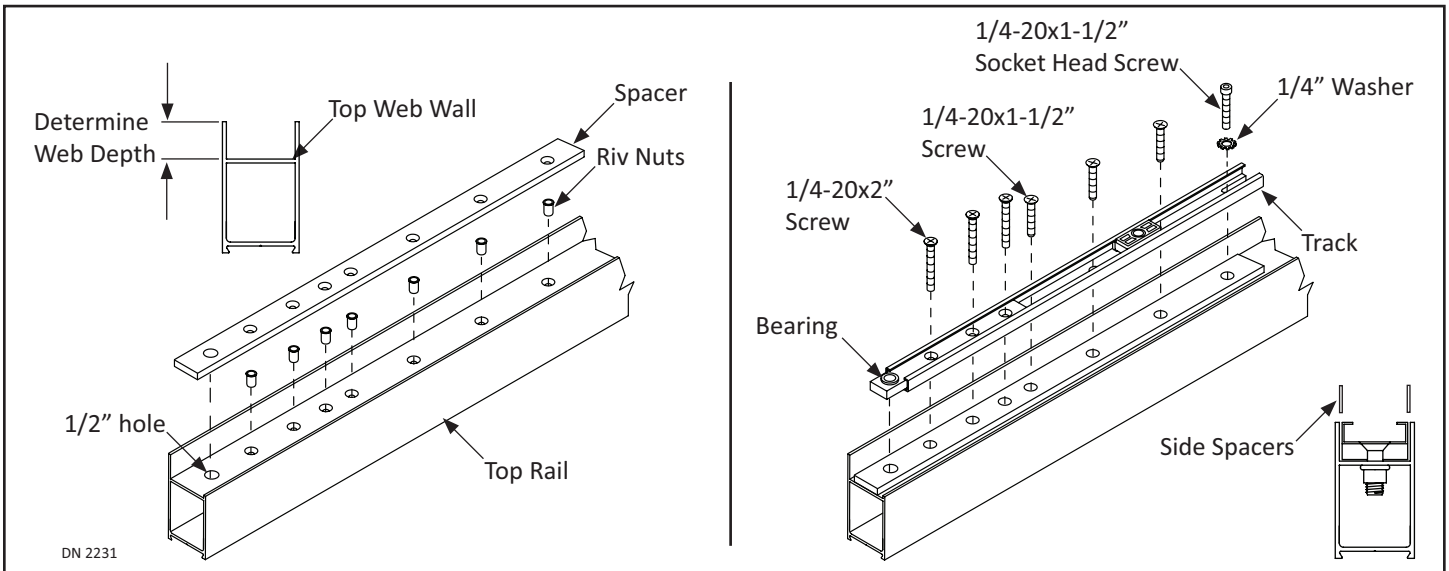

Figure 32

SECTION 17.2: Install the Bottom Door Pivot Receiver

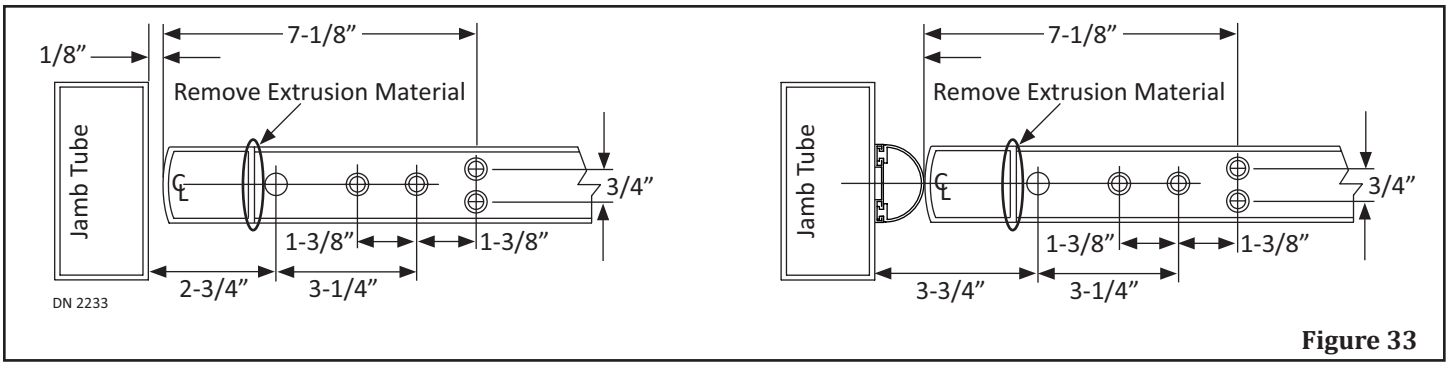

Figure 33

Attention: The NABCO Bottom Door Pivot Receiver is 1-3/8 inches wide, by 6 inches long, by 5/8 of an inch tall. The Web must be a minimum 1-3/4 inches wide; and a minimum 5/8 inches deep.

1. Ensure the Bottom Door Pivot Shaft is aligned with the Top Door Pivot Shaft.
2. Measure the Web Depth to ensure it is a minimum 5/8 of an inch; and Web Width to ensure it is a minimum of 1-3/8 inches.
3. Mill Out the extrusion material between the Bottom Rail and Pivot Stile.
    a. The extrusion material must be milled out to match the width and depth of the Top Web.

4. Measure and mark the Horizontal Center across the length of the Top Web.
5. Flip the Bottom Door Pivot Receiver so the Flat side faces the floor, and the bevelled side with the Gel Filled Bearing faces up.
6. Insert the Bottom Door Pivot Receiver inside the Web, so the 3/8 inch Pivot Receiver hole is closest to the Jamb Tube.
7. Measure to determine the proper Pivot Receiver location:
   - ▶ For Doors ***without*** a Finger Guard: Measure 2-3/4 inches from the Pivot Jamb Tube towards the Strike Jamb Tube.
   - ▶ For Doors ***with*** a Finger Guard: Measure 3-3/4 inches from the Pivot Jamb Tube towards the Strike Jamb Tube.
8. Mark a vertical line across the horizontal (center) line. This is the center of the Pivot Receiver hole.
9. Center the Pivot Receiver hole to the marked spot. Check to ensure the center of the Pivot Receiver hole is still aligned with the Bottom Pivot Shaft.
10. Square and center the Bottom Door Pivot Receiver to both Jamb Tubes



When drilling screw holes:
- Only Drill through the Bottom Web Wall of Bottom Door Rail.
- Use a 25/64 drill bit (.391 diameter) to drill (4) screw holes.
- Countersink (4) screw holes to be (.53 diameter x 82 degrees).

DN 2236

Figure 34

11. Center of the Bottom Door Pivot Receiver with the Center mark located on the Pivot Jamb Tube.
12. Use the Bottom Door Pivot Receiver as a template to mark (4) screw holes.
    a. Do not drill a hole for the Pivot Receiver with the Gel Filled Bearing.
13. With a 25/64 drill (.391) diameter, drill (4) screw holes at the marked spots.
14. Countersink each screw hole to .53 diameter x 82 degrees.

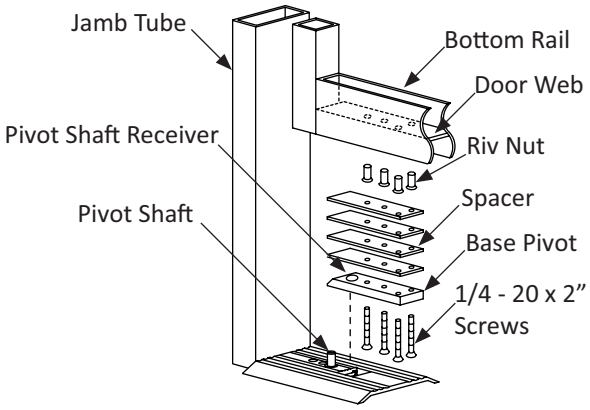

DN 0755

Figure 35

15. Insert (1) Riv Nut into each screw hole.
16. Insert the Bottom Door Pivot Receiver into the Bottom Door Rail to determine how many spacers may be needed.
17. Add/Subtract Spacers until the Flat side of the Bottom Door Pivot Receiver is flush to the outside rim of the Bottom Door Rail.
18. Secure the Bottom Door Pivot Receiver to the Bottom Door Rail with (4) 1/4 - 20 x 2 inch Screws.

SECTION 17.3: Install the Swing Door

1. Go to the Top Pivot Assembly located inside the Header.
2. Loosen the Set Screw located directly above the Pivot Shaft.
3. Go to the Self Riser screw located underneath the Pivot Shaft. Turn the Self Riser Screw counter-clockwise until the Pivot Shaft is completely retracted.

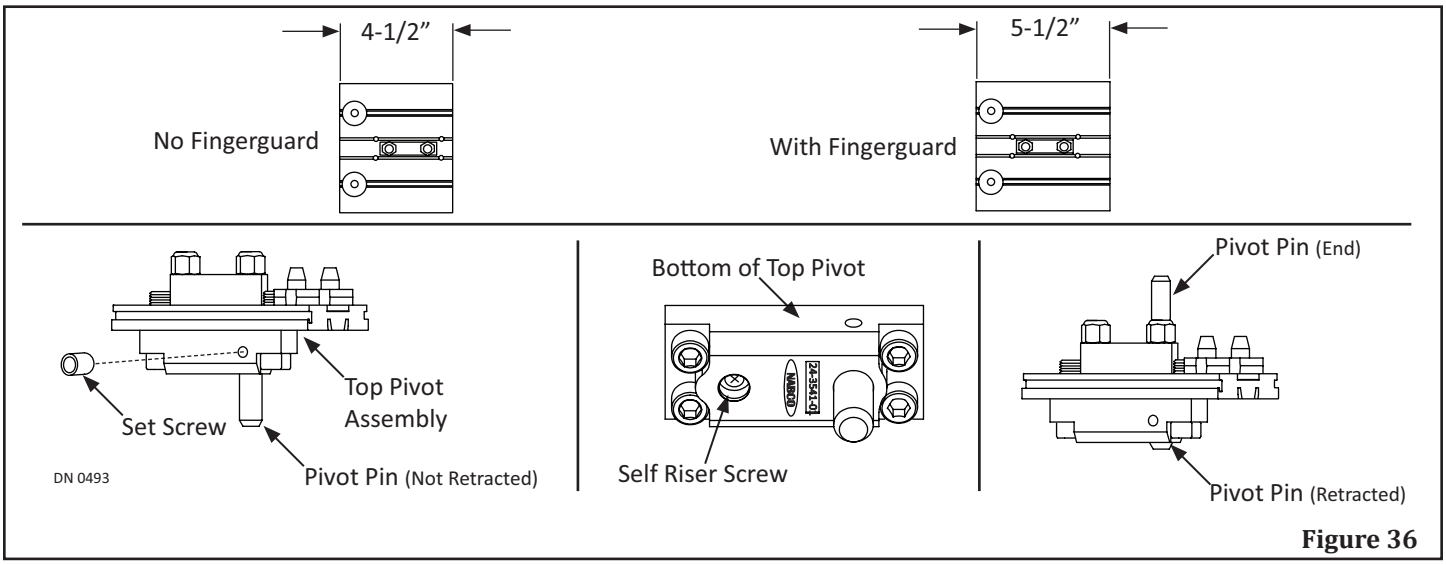

Figure 36

4. Go to the Bottom Pivot Assembly. Insert the Pivot Shaft into the Pivot Receiver.
5. Go to the top Door Rail. With a flat head screwdriver, turn the Self Riser Screw clockwise until the Pivot Pin is inserted all the way down into the Bearing.
6. Tighten the Set Screw located directly above the Pivot Shaft.

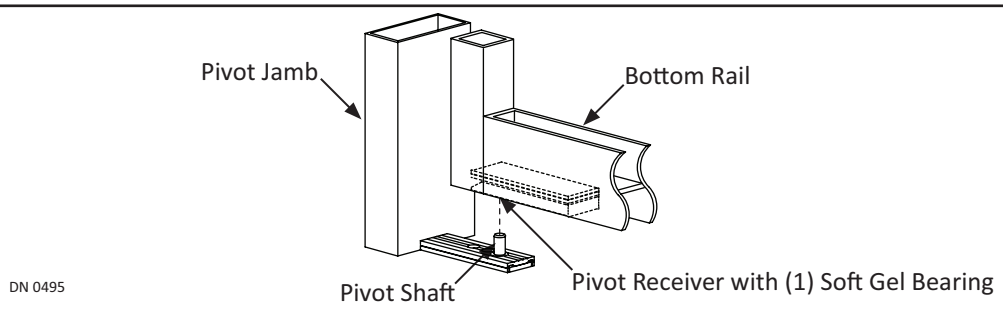

Figure 37

CHAPTER 18: ADJUST THE SWING DOOR HEIGHT

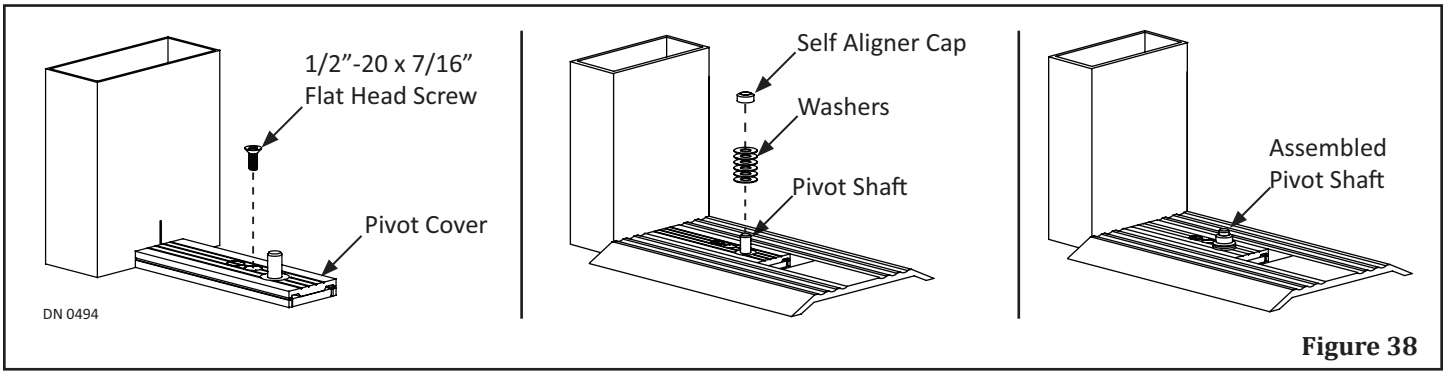

Figure 38

1. Measure for proper clearance:
   - Top of Swing door must be: 1/8 inch to 1/16 inch from Header.
   - Bottom of Swing door must be: 3/16 inch to 1/16 inch from Floor (or threshold if it is installed).
2. Remove the Swing door.
3. Slide (1-6) Spacer Shims onto the Pivot to adjust the Swing door for proper clearance.
4. Slide (1) Self Aligner Cap on top of the (1-6) Spacer Shims.
5. Reinstall the Swing door. Check the alignment.

CHAPTER 19: INSTALL THE SWING ARM

1. Obtain the Swing Arm. With an 5/16 inch Allen Wrench, remove the Pivot Screw and (3) washers. Set aside.
2. Remove the Set Screw. Loosen the Shoulder Bolt with an 3/16 inch Allen Wrench. Set aside.

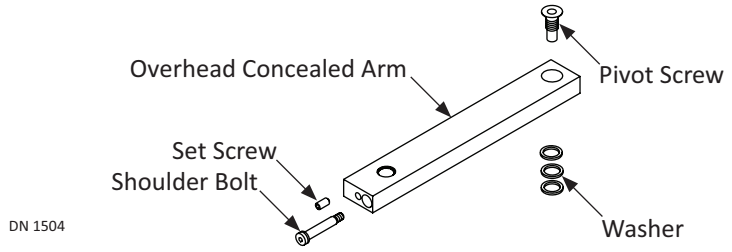

Figure 39

SECTION 19.1: Set Pre-Load

CAUTION **Power must be turned OFF during the Swing Arm installation.**

DANGER **Ensure the Motor/Operator is plugged into the Controller.**

DANGER **Do not allow the Pin or 1/8 inch Allen Wrench to drop out of the Lovejoy Coupling Access hole at any time during installation. The Swing Arm will spring back to its original location and can result in personal injury or damage.**

Table 1 Pre-Load

Full Energy	Low Energy	Inswing Panic Breakout (Only)
18 degrees to 144 degrees	18 degrees or no greater than	144 degrees only (do not hit backstop)
Not to exceed 30 pounds of Pressure	Not to exceed 15 pounds of Pressure	Not to exceed 50 pounds of Pressure
18 degrees equals (1) Tooth on the Spline		

1. Obtain (1) Pin or 1/8 inch Allen Wrench.
2. Ensure the Spring on the Operator is in the Unwound (0 degree) position.
   a. The Motor/Operator is shipped in the Unwound (0 degree) position.
3. Go underneath the Header. Locate the Operator Spindle.
4. Slide the Swing Arm onto the Spindle.

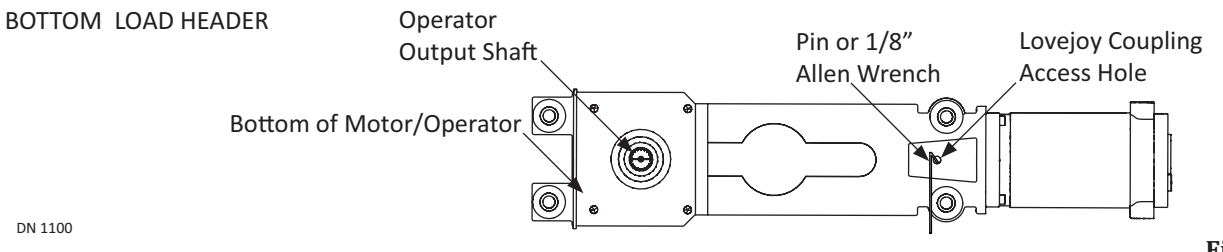

Figure 40

5. Wind the Operator by rotating the Swing Arm Clockwise for Left handing; Counterclockwise for Right Handing: according to the degrees listed within Table 1:
   - **Full Energy:** Spring on Operator must be wound up at least 18 degrees (1 Tooth on Spline).
   - **Inswing Panic Breakout Only:** Spring on Operator must be wound up appoximately 144 degrees (8 Teeth on Spline).
     1. With a firm grip, rotate the Swing Arm approximately 72 degrees (4 Teeth on Spline).
     2. While holding the Swing Arm in that position, insert (1) Pin or 1/8 inch Allen Wrench into the Lovejoy Coupling Access Hole.
        a. If necessary, ease the Swing Arm back until the Pin or 1/8 inch Allen Wrench engages the Lovejoy Coupling.
     3. Remove the Swing Arm from the Operator Spindle.
        a. The Pin or 1/8 inch Allen Wrench will keep the Spring from unwinding.
     4. Go to the 0 degree position again, slide the Swing Arm back onto the Operator Spindle. With a firm grip, rotate the Swing Arm an additional 54 - 72 degrees. The Spring on the Operator should be wound approximately 126 - 144 degrees.
     5. Remove the Swing Arm.
   - **Low Energy:** Spring on Operator must be wound up approximately 18 degrees (1 Tooth on Spline).
     1. With a firm grip, rotate the Swing Arm approximately 18 degrees (1 Tooth on Spline).
     2. While holding the Swing Arm in that position, insert (1) Pin or 1/8 inch Allen Wrench into the Lovejoy Coupling Access Hole.
        a. If necessary, ease the Swing Arm back until the Pin or 1/8 inch Allen Wrench engages the Lovejoy Coupling.
6. Remove the Swing Arm from the Operator Spindle.
7. Close the Swing Door. Reinstall the Swing Arm assembly
8. Carefully remove the Pin or 1/8 inch Allen Wrench from the Operator.

SECTION 19.2: Secure the Swing Arm to the Operator

1. Fully close the Swing door. Go to the Output Spindle located at the bottom of the Operator.
   a. A Score has been etched onto the bottom of Output Spindle.
2. Line up the Opening located on the bottom of the Swing Arm so it is perpendicular to the Spindle Score. Slide the Swing Arm onto the Spindle.
3. Tighten the Shoulder Bolt.
4. Reinsert Set Screw. Tighten.

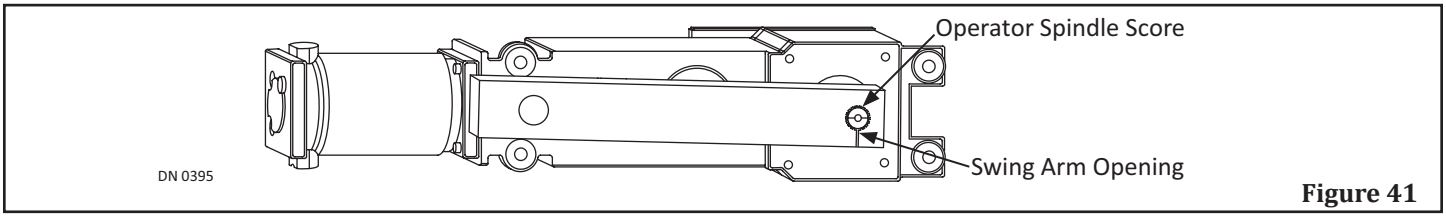

Figure 41

SECTION 19.3: Secure the Swing Arm to the Swing Door

1. Open the Swing Door.
2. Insert (1) Pin or 1/8 inch Allen Wrench into the Lovejoy Coupling Access Hole.
   a. If necessary, ease the Swing Arm back until the Pin or 1/8 inch Allen Wrench engages the Lovejoy Coupling.
3. Rotate the Swing Arm to align the Pivot Screw hole (located on free end of Swing Arm) to the Top Slide Block.
4. Check to see how many Washers will be necessary to install between the Swing Arm and the Swing door:
   - 3 for 3/16 inch Clearance Door
   - 2 for 1/8 inch Clearance Door
   - 1 for 1/16 inch Clearance Door
5. Secure the Swing Arm and Washers to the Slide Block with the Pivot Screw. Tighten.
6. Carefully remove the Pin or 1/8 inch Allen Wrench from the Operator.

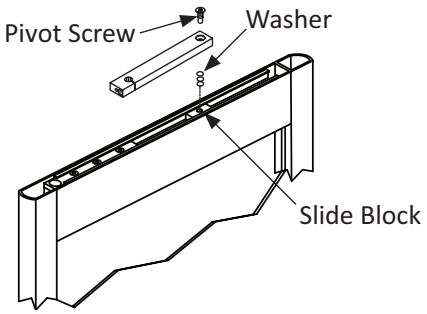

Figure 42

CHAPTER 20: SWING DOOR SAFETY CHECK

1. Ensure Header Cover has been replaced and properly secured with (2) 10-24 x 0.750 inch screws.
2. Ensure all other hardware and/or components are properly secured.
3. Ensure the Power Breaker is switched ON. Do not switch Power Breaker ON and OFF too quickly.
4. Ensure the Rocker Switch is set to “ON”.
5. Activate the Swing Door.
    1. Door should open at a slow smooth pace (4 or more seconds), and stop without impact.
    2. Door must remain fully open for a minimum of (5 seconds) before beginning to close.
    3. Door should close at a slow, smooth pace (4 or more seconds), and stop without impact.
6. Check for proper door operation.
7. Inspect door’s overall condition. The appropriate signage should be present and hardware should be in good condition.
8. Remove anything that does not belong in the path of the Swing door. There should be no bulletin boards, literature racks, merchandise displays, or other attractions in the door area that would interfere with use of the door or invite people to stop or stand in the door area.
9. Clean the doors, header, and frame.
10. Clean up the work area and floor area. Floor area should be clean with no loose parts that might cause user to trip or fall.

SERVICE PARTS: BAG P/N A-00642

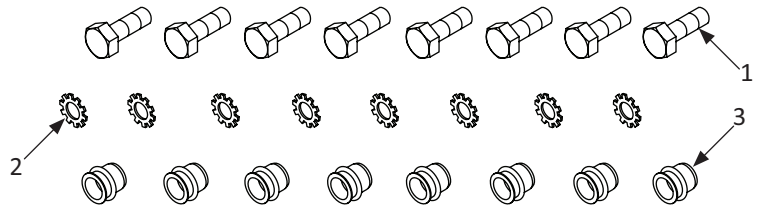

OHC Screw Bag A-00642

Item	Part	QTY	Description	Used To
1	T-00064	8	HHCS,1/4-20x0.750L.,ZINC	
2	T-00087	8	WASHER, LOCK, EXT, 1/4 ID, ZINC	Secure Header to Jamb Tubes
3	T-00048	8	RIVNUT,1/4-20, .027-.165 GRIP RANGE	

SERVICE PARTS: BAG P/N A-00565

OHC Track Assembly for 5/8 inch Web

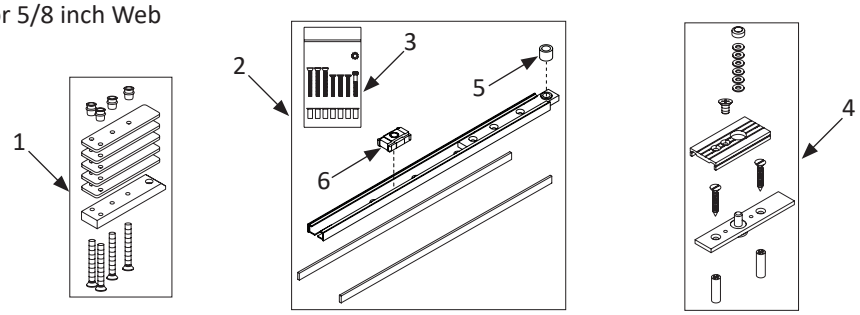

DN 1357

OHC Track for 5/8 inch Web: A-00565

Item	Part	QTY	Description	Used To
1	A-00500	1	BTTM PIVOT ASSY, DOOR PORTION, SWING DR	Open/Close the Swing Door
2	A-00459	1	TRACK,OHC,W/ SCREW BAG	Seat Swing Arm within the Top Web
3	A-00450	1	PARTS BAG,O.H.C. TRACK,SCREW	Secure Track Assembly inside the Top Web
4	A-00417	1	FLOOR PIVOT ASSY, PIN & COVER	Open/Close the Swing Door
5	V-00115	1	BEARING, 1/2 x 3/4 x 5/8” WIDE	Seat Pivot Pin
6	A-00456	1	SLIDE BLOCK,ASSY	Slide Swing Arm inside Track to Open/Close Door

SERVICE PARTS: BAG P/N A-01406

OHC Track Assembly with Spacer for 1-9/16 inch Web

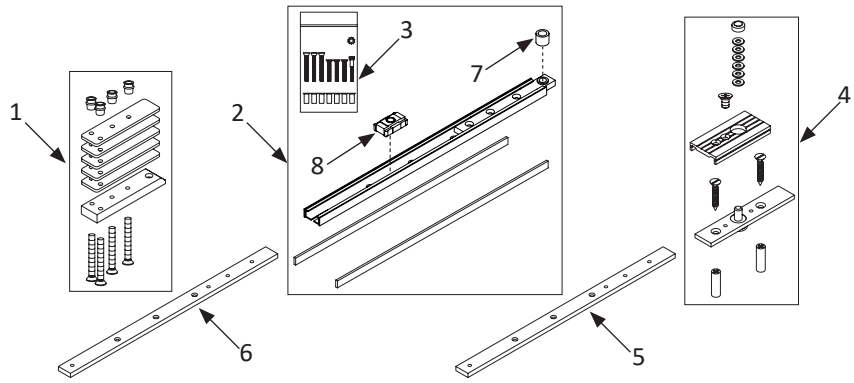

DN 1518

OHC Track for 1-9/16 inch Web: A-01406

Item	Part	QTY	Description	Used To
1	A-00500	1	BTTM PIVOT ASSY, DOOR PORTION, SWING DR	Open/Close the Swing Door
2	A-00459	1	TRACK,OHC,W/ SCREW BAG	Seat Swing Arm within the Top Web
3	A-00450	1	PARTS BAG,O.H.C. TRACK,SCREW	Secure Track Assembly inside the Top Web
4	A-00417	1	FLOOR PIVOT ASSY, PIN & COVER	Open/Close the Swing Door
5	M-01337	1	BLOCK,SPACER,3/16”	Adjust height of Track within Top Rail
6	M-01342	2	BLOCK - SPACER 3/8”	Adjust height of Track within Top Rail
7	V-00115	1	BEARING, 1/2 x 3/4 x 5/8” WIDE	Seat Pivot Pin
8	A-00456	1	SLIDE BLOCK,ASSY	Slide Swing Arm inside Track to Open/Close Door

SERVICE PARTS: BAG P/N A-01410

OHC Track Assembly with Spacer for 1 inch Web

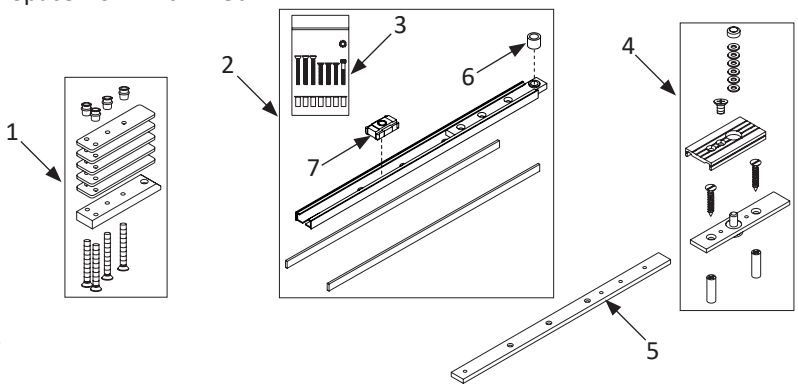

OHC Track for 1 inch Web: A-01410

Item	Part	QTY	Description	Used To
1	A-00500	1	BTTM PIVOT ASSY, DOOR PORTION, SWING DR	Open/Close the Swing Door
2	A-00459	1	TRACK,OHC,W/ SCREW BAG	Seat Swing Arm within the Top Web
3	A-00450	1	PARTS BAG,O.H.C. TRACK,SCREW	Secure Track Assembly inside the Top Web
4	A-00417	1	FLOOR PIVOT ASSY, PIN & COVER	Open/Close the Swing Door
5	M-01342	1	BLOCK - SPACER 3/8”	Adjust height of Track within Top Rail
6	V-00115	1	BEARING, 1/2 x 3/4 x 5/8” WIDE	Seat Pivot Pin
7	A-00456	1	SLIDE BLOCK,ASSY	Slide Swing Arm inside Track to Open/Close Door

SERVICE PARTS: BAG P/N A-01411

OHC Track Assembly with Spacer for 7/8 inch Web

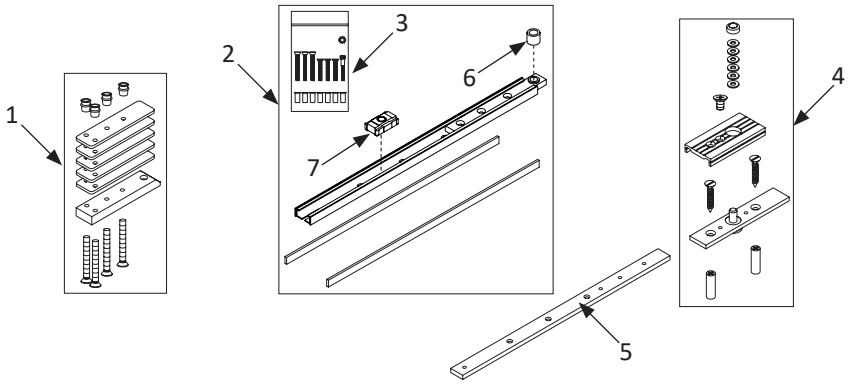

OHC Track for 7/8 inch Web: A-01411

Item	Part	QTY	Description	Used To
1	A-00500	1	BTTM PIVOT ASSY, DOOR PORTION, SWING DR	Open/Close the Swing Door
2	A-00459	1	TRACK,OHC,W/ SCREW BAG	Seat Swing Arm within the Top Web
3	A-00450	1	PARTS BAG,O.H.C. TRACK,SCREW	Secure Track Assembly inside the Top Web
4	A-00417	1	FLOOR PIVOT ASSY, PIN & COVER	Open/Close the Swing Door
5	A-00948	1	SPACER BLOCK 1/4”	Adjust height of Track within Top Rail
6	V-00115	1	BEARING, 1/2 x 3/4 x 5/8” WIDE	Seat Pivot Pin
7	A-00456	1	SLIDE BLOCK,ASSY	Slide Swing Arm inside Track to Open/Close Door

SERVICE PARTS: OHC OPUS BOTTOM LOAD HEADER

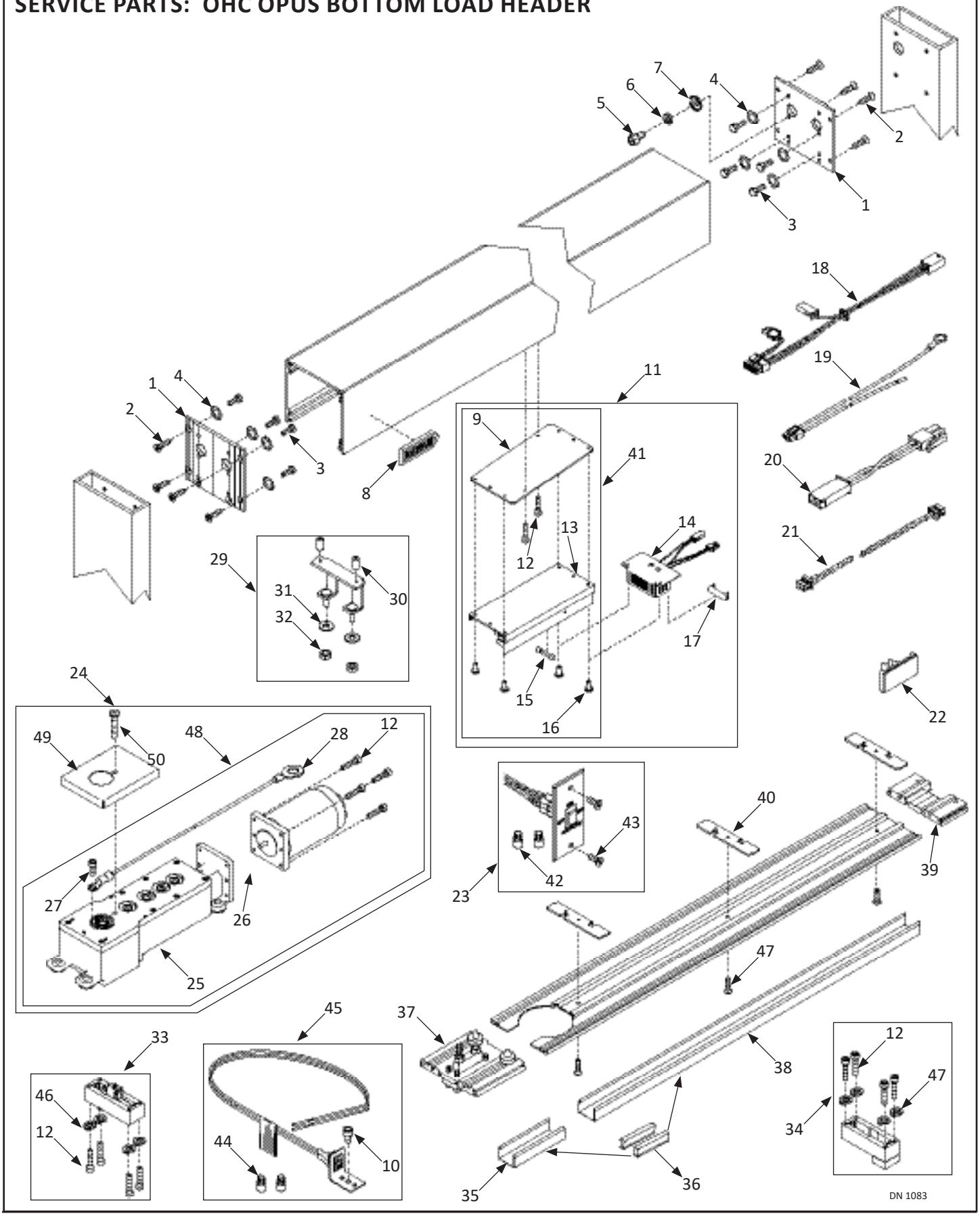

OHC Opus Bottom Load Header			
Item	**Part**	**Notes**	**Description**
1	A-01379	Clear	END CAP,SWING HEADER,BTM LOAD,O.H.C.,204
	A-71379	Dark Bronze	END CAP,SWING HEADER,BTM LOAD,O.H.C.,313
2	T-00061		FHMS,1/4-20x1.000L.,PHIL,TRI-LOBE,ZINC
3	T-00064		HHCS,1/4-20x0.750L.,ZINC
4	T-00087		WASHER, LOCK, EXT, 1/4 ID, ZINC
5	T-00346		HHCS:1/4-20x0.375L:GREEN:WASH HD:SLOT
6	M-00450		SPACER,MTG.END CAP
7	V-00104		WASHER, CUP.312 ID X .88 OD X .040 THICK
8	C-00067		NAMEPLATE, ADHESIVE BACKED
9	M-01735		PLATE,BOTTOM LOAD,OPUS
10	T-00335		SHCS:10-24x0.313L.
11	A-01098		CONTROLLER,W/ BRAKE,BOTTOM LOAD,OPUS
12	T-00232		SHCS,10-24x0.875L.,ZINC
13	M-01546		CONTROLLER,OPUS
14	A-01003		BRAKE MODULE,OPUS
15	V-00288	Used on Brake Module	LITTLE FUSE 250 V FAST 2AG 3AMP AXIAL L
	V-00552	Used on Opus Control	FUSE;5A;GMA;5X20mm
16	T-00420		PHMS,8-32x0.375”L,PHIL,SWAGEFORM,ZINC
17	V-00411		RESISTOR,200 OHM,20 W.,WIREWOUND
18	A-01000	Not used on GT710/8710	HARNESS,MOTOR,OPUS CONTROL
19	M-01072		HARNESS,POWER,MAGNUM/OPUS
20	A-01001	Not used on GT710/8710	HARNESS,HANDING,NGT-10
21	M-01680	Simultaneous Pair	HARNESS,OPUS CONTROL,SIM PAIR
22	V-00098		SADDLE, WIRE
23	A-00805		SWITCH,ROCKER,SWINGER,ON/OFF/HOLD OPEN
24	A-01093	RH	OPERATOR,SWING,WELDED,ENCODR,ROF,BTM,RH
	A-01092	LH	OPERATOR,SWING,WELDED,ENCODR,ROF,BTM,LH
25	A-01053	RH	OPERATOR,SWNGR,WELDED,ROF,RH (NO MOTOR)
	A-01052	LH	OPERATOR,SWNGR,WELDED,ROF,LH (NO MOTOR)
26	V-00090		MOTOR,SHORT FRAME,ENCODER,DUOWEI
27	T-00185		SHCS,10-24x0.500L.,BK.OX.
28	A-00620		GROUND WIRE:SWING OPERATOR:MAGNUM
29	A-00501		BRKT.;MOTOR;REAR;BTM.LOAD
30	T-00073		SHSS,1/4-20x0.500L.,KNURL PT.
31	T-00092		WASHER,.438 ID,1.00 OD,.083 THK,ZINC
32	T-00067		NUT,HEX,JAM,3/8-16,ZINC
33	A-00430	Clear	KIT,PANIC LATCH,O.H.C.204
	A-70430	Dark Bronze	KIT,PANIC LATCH,O.H.C.,313
34	A-00643		DOOR STOP:NON PANIC
35	A-61176	Clear	FILLER CHANNEL;HINGE STILE;5-15/32,204
	A-71176	Dark Bronze	FILLER CHANNEL;HINGE STILE;5-15/32,313
36	M-00688		PILE WEATHERING .45 TALL W/ ADHESIVE

OHC Opus Bottom Load Header			
Item	**Part**	**Notes**	**Description**
37	A-61362	Clear/No Finger Guard	ASM,CENTER PIVOT,BOTTOM LOAD,4-1/2”,204
	A-71362	Dark Bronze/No Finger Guard	ASM,CENTER PIVOT,BOTTOM LOAD,4-1/2”,313
	A-00560	Clear/Finger Guard	TOP PIVOT/BASE:OHC:204
	A-70560	Dark Bronze/Finger Guard	TOP PIVOT/BASE:OHC:313
38	M-60897	Clear	CHANNEL,SNAP IN,204,,EXTRU
	M-70897	Dark Bronze	CHANNEL,SNAP IN,313,EXTRU
40	M-01374	Clear	OHC,SINGLE STRIKE BASE,3-1/4”
	M-71374	Dark Bronze	OHC,SINGLE STRIKE BASE,3-1/4”
41	M-01177		LOCK COVER PLATE - BOTTOM
42	A-01143		CONTROLLER,W/O BRAKE,BOTTOM LOAD,OPUS
43	T-00197		NUT,WIRE,RANGE 22-14AWG,GREY
44	T-00031		FHMS,10-32x0.500L.,PHIL,UCUT,T-LOBE,BKZN
45	T-00047		NUT,WIRE,72B,2-18AWG-3-16AWG
46	A-00409		PARTS BAG,ON/OFF,SWINGER,SWITCH
47	T-00231		WASHER, LOCK, SPLIT, #10 ID, ZINC
48	T-00391		FHMS,10-24x0.750”L.,PHIL,ZINC
49	A-01090		OPERATOR,SWING,WELDED,ENCODR,ROF,SIDE,LH
	A-01091		OPERATOR,SWING,WELDED,ENCODR,ROF,SIDE,RH
50	A-00348		COVER,SWITCH,SWINGER
51	T-00238		FHMS,10-24x1.000L.,PHIL,ZINC

SERVICE PARTS: OHC OPUS SIDE LOAD HEADER

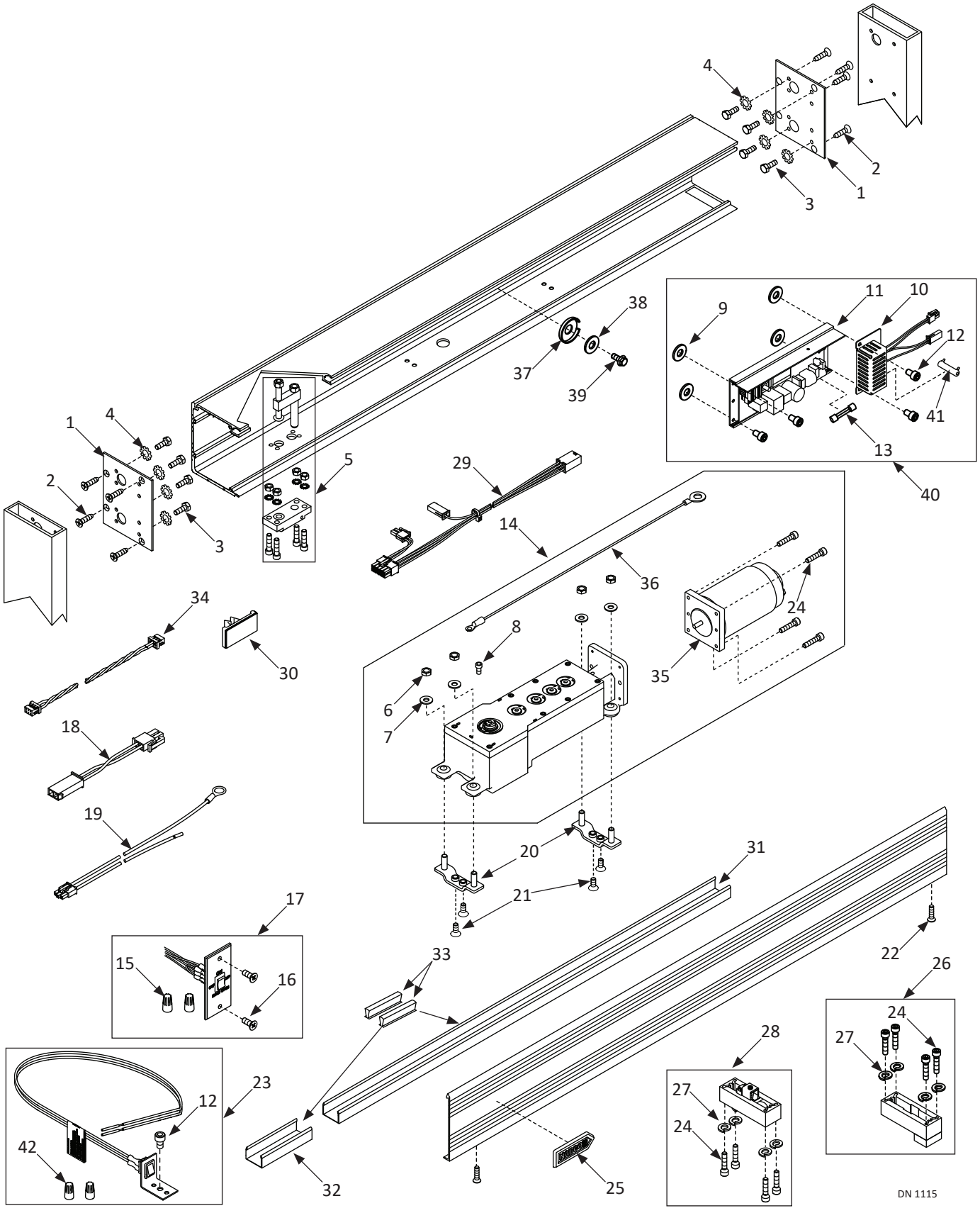

OHC Opus Side Load Header			
Item	**Part**	**Notes**	**Description**
1	M-61172		END CAP,SIDELOAD,OHC,2 ACCESS HOLES,204
	M-71172		END CAP,SIDELOAD,OHC,2 ACCESS HOLES,313
2	T-00061		FHMS,1/4-20x1.000L.,PHIL,TRI-LOBE,ZINC
3	T-00064		HHCS,1/4-20x0.750L.,ZINC
4	T-00087		WASHER, LOCK, EXT, 1/4 ID, ZINC
5	A-00490		PIVOT,TOP,SWINGER
6	T-00067		NUT,HEX,JAM,3/8-16,ZINC
7	T-00092		WASHER,.438 ID,1.00 OD,.083 THK,ZINC
8	T-00185		SHCS,10-24x0.500L.,BK.OX.
9	T-00365		WASHER:5/32IDx3/4ODx.020THK:POLYETHYLE
10	M-01175		HARNESS,MOTOR,BRAKE MODULE,SWINGER
11	M-01546		CONTROLLER,OPUS
12	T-00335		SHCS:10-24x0.313L.
13	V-00288		LITTLE FUSE 250 V FAST 2AG 3AMP AXIAL L
	V-00552		FUSE;5A;GMA;5X20mm
14	A-01091		OPERATOR,SWING,WELDED,ENCODR,ROF,SIDE,RH
	A-01090		OPERATOR,SWING,WELDED,ENCODR,ROF,SIDE,LH
15	T-00197		NUT,WIRE,RANGE 22-14AWG,GREY
16	T-00031		FHMS,10-32x0.500L.,PHIL,UCUT,T-LOBE,BKZN
17	A-00805		SWITCH,ROCKER,SWINGER,ON/OFF/HOLD OPEN
18	A-01001		HARNESS,HANDING,NGT-10
19	A-01000		HARNESS,MOTOR,OPUS CONTROL
20	M-01043		BRACKET, OPERATOR, SIDELOAD HEADER
21	T-00334	Clear	FHMS:5/16-18x0.750L.:SOKT:ZN
	T-00370	Dark Bronze	FHMS:5/16-18x0.750L.:SOKT:BK.ZN
22	T-00337		PHSMS:#8x0.625L.:PHIL
23	A-00409		PARTS BAG,ON/OFF,SWINGER,SWITCH
24	T-00232		SHCS,10-24x0.875L.,ZINC
25	C-00067		NAMEPLATE, ADHESIVE BACKED
26	A-60643	Clear	DOOR STOP, NON PANIC, 204
	A-70643	Dark Bronze	DOOR STOP, NON PANIC, 313
27	T-00231		WASHER, LOCK, SPLIT, #10 ID, ZINC
28	A-00430	Clear	KIT,PANIC LATCH,O.H.C.204
	A-70430	Dark Bronze	KIT,PANIC LATCH,O.H.C.,313
29	M-01072		HARNESS,POWER,MAGNUM/OPUS
30	V-00098		SADDLE, WIRE
31	M-60889		SNAP CHANNEL, GT8000,204,,EXTRU
	M-70889		SNAP CHANNEL, GT8000,313,EXTRU
32	M-01303		SNAP IN,CHANNEL,204,W-FG
	M-71303		SNAP IN,CHANNEL,313,W-FG
	M-01302		SNAP IN,CHANNEL,204,NO-FG
	M-71302		SNAP IN,CHANNEL,313,NO-FG

OHC Opus Side Load Header			
Item	**Part**	**Notes**	**Description**
33	M-00688		PILE WEATHERING .45 TALL W/ ADHESIVE
34	M-01680		HARNESS,OPUS CONTROL,SIM PAIR
35	V-00090		MOTOR,SHORT FRAME,ENCODER,DUOWEI
36	A-00620		GROUND WIRE:SWING OPERATOR:MAGNUM
37	V-00104		WASHER, CUP.312 ID X .88 OD X .040 THICK
38	M-00450		SPACER,MTG.END CAP
39	T-00347		HHCS:10-32x0.375L:GREEN:WASH HD:SLOT
40	A-00888		CONTROLLER;OPUS W-CHASSIS & BRAKE
41	V-00411		RESISTOR,200 OHM,20 W.,WIREWOUND
42	T-00047		NUT,WIRE,72B,2-18AWG-3-16AWG

SERVICE PARTS: SWING DOOR

Viewed from Breakout Side

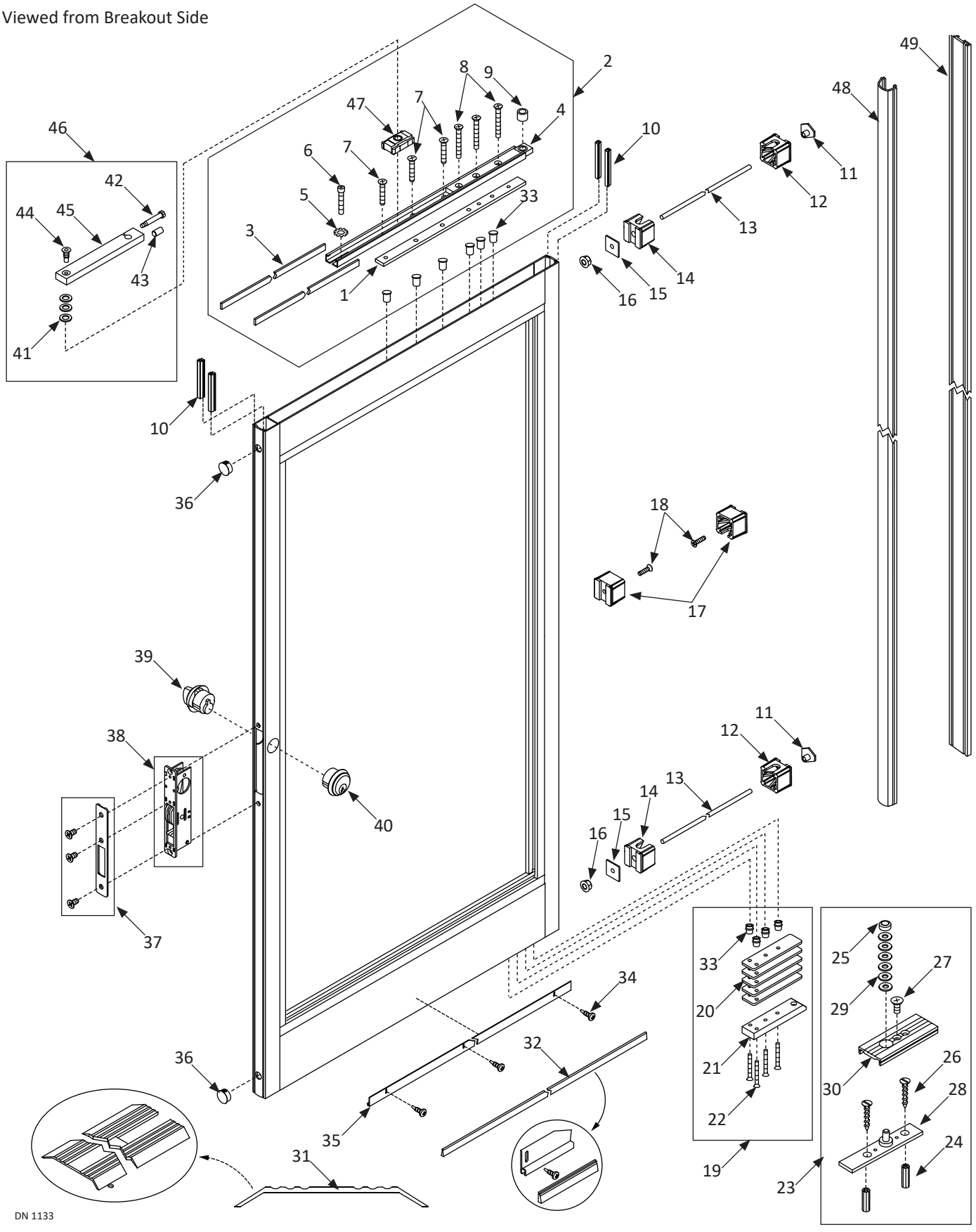

OHC Swing Door			
Item	**Part**	**Notes**	**Description**
1	A-00948	1/4” Spacer	SPACER BLOCK 1/4”
	M-01342	3/8” Spacer	BLOCK - SPACER 3/8”
	M-01337	3/16” Spacer	BLOCK,SPACER,3/16”
2	A-00565	No Spacer	OHC TRACK AND PIVOT ASM 5/8” WEB
	A-01406	(2) 3/8” + (1) 3/16” Spacers	OHC TRACK AND PIVOT ASM 1-9/16” WEB
	A-01410	3/8” Spacer	OHC TRACK AND PIVOT ASM 1” WEB
	A-01411	1/4” Spacer	OHC TRACK AND PIVOT ASM 7/8” WEB
3	M-01327		SPACER,SIDE
4	A-00455		PIVOT BLOCK,O.H.C.,TRACK W/STOP
5	T-00087		WASHER, LOCK, EXT, 1/4 ID, ZINC
6	T-00101		SHCS,1/4-20x1.500”L.,BK.OX.
7	T-00089		FHMS,1/4-20x1.500L.,PHIL,UNDERCUT,ZINC
8	T-00172		FHMS,1/4-20x2.000L.,PHIL,ZINC
9	V-00115		BEARING, 1/2 x 3/4 x 5/8” WIDE
10	M-00499		WEATHERING:PILE:.27W X .25H:W/ ADH & FIN
11	M-00416		T-NUT, 3/8”-16, TIE ROD
12	M-00460		CLIP,MUNTIN,.500 HOLE
13	M-00272		3/8-16 THREADED ROD
14	M-00461		CLIP,MUNTIN,.386 HOLE
15	M-00422		PLATE,TIE ROD
16	T-00025		NUT,WHIZLOCK,3/8-16,ZINC
17	M-00462		CLIP,MUNTIN,.261 HOLE
18	T-00061		FHMS,1/4-20x1.000L.,PHIL,TRI-LOBE,ZINC
19	A-00500		BTTM PIVOT ASSY, DOOR PORTION, SWING DR
20	M-01053		SPACER,BASE PIVOT,OHC
21	A-01146		BASE PIVOT,O.H.C.SUB ASM.
22	T-00172		FHMS,1/4-20x2.000L.,PHIL,ZINC
23	A-00417		FLOOR PIVOT ASSY, PIN & COVER
24	T-00314		SCREW ANCHOR, #16 X 1” LG
25	M-01166		SELF ANGLER,PIVOT BASE,UL PART
26	T-00313		FHSMS - SLOTTED, #14 X 1 1/12” LG
27	T-00016		FHMS,1/4-20x0.438L.,PHIL,UNDERCUT,ZINC
28	M-01183		SHAFT,BASE PIVOT,OHL-UL PART
29	T-00312		SHIM WSHR, .437 ID X .969 OD X .032 THK
30	M-01230		COVER,THRESHOLD PLATE,5-1/4”
31	M-60297		THRESHOLD, 5.00 X 1/2” SADDLE,204,EXTRU
32	M-00699		BRUSH,NYLON, .56”
	M-00700		BRUSH, NYLON, .44”
33	T-00048		RIVNUT,1/4-20, .027-.165 GRIP RANGE
34	T-00222	Zinc	PHSMS,6x0.500L.,PHIL,TEKS,ZINC
	T-00260	Black Zinc	PHSMS,6x0.500L. PHIL,TEKS BLK ZN

OHC Swing Door			
Item	**Part**	**Notes**	**Description**
35	M-60278	Clear	HOLDER,WEATHERING BRUSH,204,EXTRU
	M-70278	Dark Bronze	HOLDER,WEATHERING BRUSH,313,EXTRU
36	V-00720		PLUG,HOLE,13/16 DOME
37	V-00014	Clear	COVER,MS LOCK,W/ CUTOUT,204
	V-70014	Dark Bronze	COVER,MS LOCK,W/ CUTOUT,313
38	V-00005		LOCK, ADAMS-RITE #MS1853
39	V-00116	Clear	CYLINDER,LOCK,THUMBTURN,204
	V-70116	Dark Bronze	CYLINDER,LOCK,THUMBTURN,313
40	V-00123	Clear	CYLINDER,LOCK,KEYED,204
	V-70123	Dark Bronze	CYLINDER,LOCK,KEYED,313
41	T-00319		WASHER15/32 IDx5/8 ODx1-1/16THK
42	T-00318		BOLT,SHLDR.3/8 DIAx1.750L.
43	T-00322		SHSS,5/16-24x0.625L.,CUP PT.
44	M-01331		PIVOT SCREW,FHSMS
45	A-60788	Clear	ARM,SPLINED,O.H.C,204
	A-70788	Dark Bronze	ARM,SPLINED,O.H.C,313
46	A-60458	Clear	ARM,O.H.C.,N.H.,204
	A-70458	Dark Bronze	ARM,O.H.C.,N.H.,PANIC AND NO PANIC,313
47	A-00456		SLIDE BLOCK,ASSY
48	M-01171	Black	WEATHER STRIP BLUB, BLACK IN BULK
49	M-80893	Black	WEATHERING CHANNEL,BLK.EXTRU