TECHNICAL BULLETIN

S82 W18717 Gemini Drive
Muskego, WI, 53150
Phone: (877) 622-2694, Fax: (888) 679-3319
www.NABCOEntrances.com

Date: January 29, 2018

Who is the contact?
Technical Support Department

How to Change the Hand and/or Direction of Swing on a GT20

To change hand: (**1**) remove cover, (**2**) remove top plastic filler, (**3**) flip the unit over, (**4-5**) re-locate arm to opposite side, (**6**) install arm & spindle in splined receiver on gearbox.

If also changing from inswing to outswing or vice versa, re-locate motor connector as explained below.

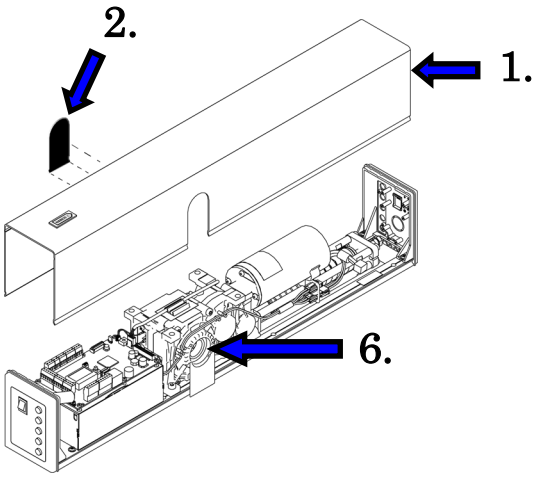

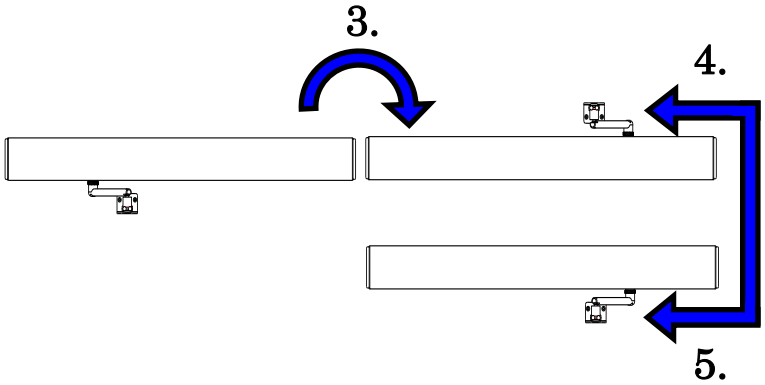

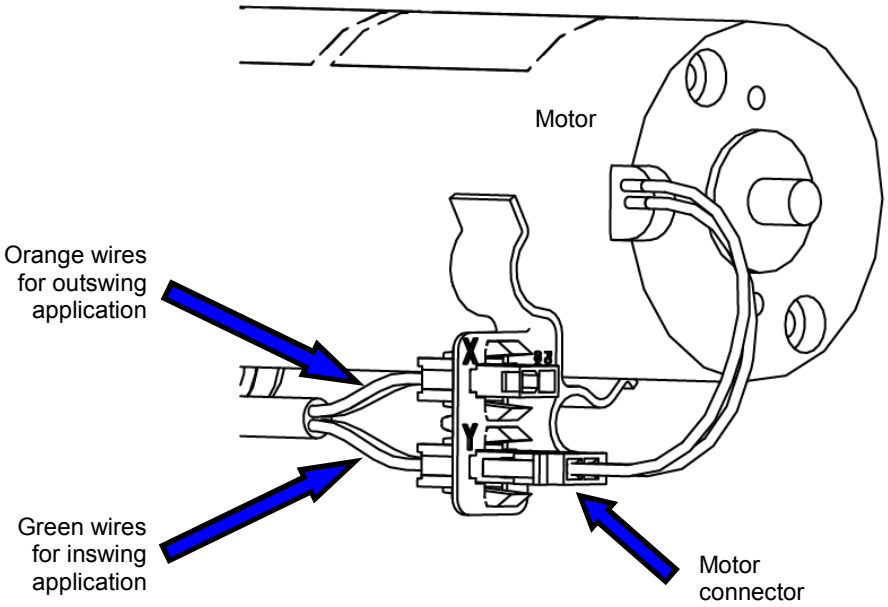

To change from inswing to outswing or vice versa, move the motor connector to the other plug.

The connection at the left is shown for an inswing. The “inswing” wires are Green and the motor connector is plugged into “Y”

To change the unit to an outswing, plug the motor connector into “X” aligning with the Orange “outswing” wires.

Bulletin Number: **93**