S82 W18717 Gemini Drive; Muskego, Wisconsin 53150
Phone: (877) 622-2694
Fax: (888) 679-3319
www.nabcoentrances.com
Technical Support: (866) 622-8325
NABCO hours of Operation: Monday to Friday 8:00 a.m.- 4:30 p.m. (Central Time)

Model GT20
Full Automatic and Low Energy Power Operated Doors
OWNER'S MANUAL

A Founding Member of: AAADM
(American Association of Automatic Door Manufacturers)

WARNING

- Turn OFF all power to the Automatic Door if a Safety System is not working.
- Instruct the Owner to keep all power turned OFF until corrective action can be achieved by a NABCO trained technician. Failure to follow these practices may result in serious consequences.
- NEVER leave a Door operating without all Safety detection systems operational.

Table of Contents

CHAPTER 1: WARNING LABELS 2
CHAPTER 2: GENERAL SAFETY RECOMMENDATIONS 2
CHAPTER 3: SCOPE. 2
SECTION 3.1: To the Customer 2
SECTION 3.2: Objective 2
CHAPTER 4: GETTING STARTED 2
SECTION 4.3: Safety Standard Compliance 3
SECTION 4.4: Limited Warranty 3
SECTION 4.5: Information Provided by Door Supplier 3
CHAPTER 5: GENERAL SAFETY 3
CHAPTER 6: OPERATION 4
CHAPTER 7: FULL AUTOMATIC SWING DOOR 4
SECTION 7.1: Sensors 4
SECTION 7.2: Sensor Types 4
SECTION 7.3: Sensor Malfunctions. 5
SECTION 7.4: Daily Safety Check. 6
SECTION 7.5: Safety Decals for Full Automatic Swing Doors 8
CHAPTER 8: LOW ENERGY SWING DOOR. 9
Section 8.6: Daily Safety Check. 9
Section 8.7: Safety Decals for Low Energy Units 10

Part #C-00170
Rev. 8/29/17

CHAPTER 1: WARNING LABELS

Please refer to this section in the event a warning label within this manual needs further explanation.

WARNING **Indicates a hazardous situation which has some probability of *severe injury*. It should not be considered for property damage unless personal injury risk is present.**

CAUTION **Indicates a hazardous situation which may result in a *minor injury*. Caution should not be used when there is a possibility of serious injury. Caution should not be considered for property damage accidents unless a personal injury risk is present.**

Notice: **Indicates a statement of company policy as the message relates to the personal safety or protection of property. Notice should not be used when there is a hazardous situation or personal risk.**

Note: Indicates important information that provides further instruction.

CHAPTER 2: GENERAL SAFETY RECOMMENDATIONS

WARNING **An improperly adjusted door can cause injury and/or equipment damage.**

WARNING **Safety devices must be installed correctly and operational.**

WARNING **Do Not operate any Swing Door Unit without fully understanding how a Swing Door functions. If you do not fully understand, ask a qualified technician. Failure to do so may result in bodily injury, or property damage and will nullify all warranties.**

Notice: **This manual must be given to and retained by the purchasing facility or end user.**

Notice: **Inspect door operation daily using the Daily Safety Checklist (within this manual and on door).**

Notice: **Have door inspected at least annually by an AAADM certified inspector.**

Notice: **An ecologically acceptable disposal of the installation is ensured if the different materials are separated and recycled. No particular measures are required for the protection of the environment. However, the relevant legal prescriptions applicable for the installation site have to be complied with!**

CHAPTER 3: SCOPE

SECTION 3.1: To the Customer

The purpose of this manual is to familiarize the Owner with proper operation of the door. It is essential that the Owner recognizes the importance of maintaining a door system in compliance with industry standards for safety.

It is the responsibility of the Owner/Caretaker to inspect operation of the door on a daily basis. Daily inspection must be done to ensure safe door operation for use by pedestrians, including (but not limited to) invitees, customers, or employees.

SECTION 3.2: Objective

This manual provides a description of operation and maintenance requirements, and instructions for a daily safety inspection.

WARNING **Should the door fail to operate as prescribed in the Daily Safety Check, or at any other time for any other reason, DO NOT attempt to repair or adjust the door. Call an AAADM Certified technician. These technicians are trained to service automatic door systems in accordance with ANSI/BHMA A156.10 (Full Automatic) and ANSI/BHMA A156.19 (Low Energy).**

CHAPTER 4: GETTING STARTED

Automatic Swing doors are comprised of two or more separate panels, of which one panel swings, and the other panel slides in a guide. Automatic Swing doors include a variety of configurations, including: a single Swing door Swing in or out, left hand or right hand or a pair of doors simultaneously Swing in or out, left hand and right hand.

In all instances, guide rails may be required to protect the swing area of the door panel. If the door swings against a natural protective barrier such as a wall, then perhaps the guide rails can be eliminated.

Service Availability

Door products are distributed through a nationwide network of authorized suppliers for sales, installation, and service. Immediately contact the Door Manufacturer or the Authorized Door Manufacturer Representative, if service must be performed on an automatic door system.

SECTION 4.3: Safety Standard Compliance

The automatic door system was designed to comply with the latest operating and safety standards. To ensure continued, safe operation it is important that:

- The door system is maintained in compliance with industry standards.
- Proper decals/labels are applied and maintained on doors.
- All doors should be checked by an AAADM certified inspector at least annually.

The American Association of Automatic Door Manufacturers, has established a program to certify automatic door inspectors. Through this program, inspectors are trained to check door systems for compliance with the appropriate version of an ANSI standard. In the United States, ANSI Standard 156.10 (Used to cover Full Automatic doors) applies, and ANSI Standard 156.19 (Used to cover Low Energy doors) applies.

SECTION 4.4: Limited Warranty

NABCO Entrances Inc., for its Gyro-Tech product line, provides to its purchasing distributor a limited warranty on the equipment supplied by NABCO Entrances Inc. The warranty is:

> **NABCO ENTRANCES INC. will exchange or repair, F.O.B. the plant, any component found defective in workmanship and/or material, subject to NABCO's inspection, for a period of one (1) year after installation or 18 months after manufacture, whichever comes first. Warranty does not include field service labor. The installing contractor/customer will be responsible for installation and field service. This is NABCO ENTRANCES Inc.'s sole warranty.**

This warranty does not cover loss or damages resulting from causes beyond the manufacturer's control, misuse, neglect, accidents, windstorms, or other acts of God, or acts of terrorism. Warranty is for normal use and service. The warranty does not apply to equipment that has been repaired or altered so as to adversely affect conditions of operation. Warranty will not obligate NABCO for damages resulting from such alterations, misuse, or acts of God, or acts of terrorism.

SECTION 4.5: Information Provided by Door Supplier

Note: To obtain an AAADM Daily Safety Check video, please go to http://www.aaadm.com/doorowners.asp

The Door Supplier must provide the Owner/Caretaker:

- Instruction on how to conduct the Daily Safety Check.
- Location of activation Switches and Push Plates with instruction of their use.
- Contact number to call for Service.
- Contact number to call for inquiries about the door system, and/or to report concerns.
- An AAADM inspection form, or a Work Order signed by an AAADM certified inspector.
- Affixed to the Door, a completed Annual Compliance Inspection label, at the bottom of the Safety Information label.
- Warranty information for each Product.

CHAPTER 5: GENERAL SAFETY

Pay attention to the following safety items and perform checks periodically where noted.

- Force (Force can be measured with a force gauge):
  - Force to prevent the door from closing should not exceed 30 pounds.
  - If the door is equipped, force to Breakout the door should not exceed 50 pounds.
  - Force to open door in the event of a power failure should not exceed 30 pounds.
- Breakout Mode (If Equipped): When the door (or door including a sidelite) is pushed into Breakout mode, check that the door will not activate into other direction.
- Strike Stile: With door open, grasp the Strike Stile of door and attempt to move it vertically and horizontally. There should be very little, if any, looseness in the door pivots, and/or in connections between door and operator.

CHAPTER 6: OPERATION

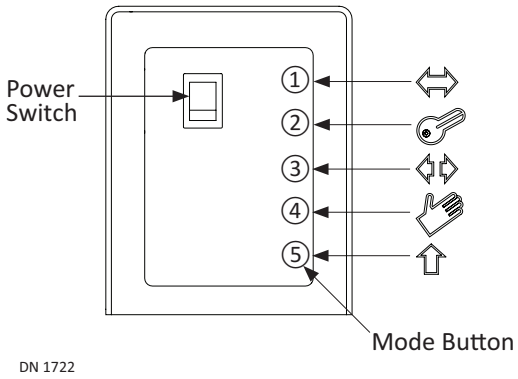

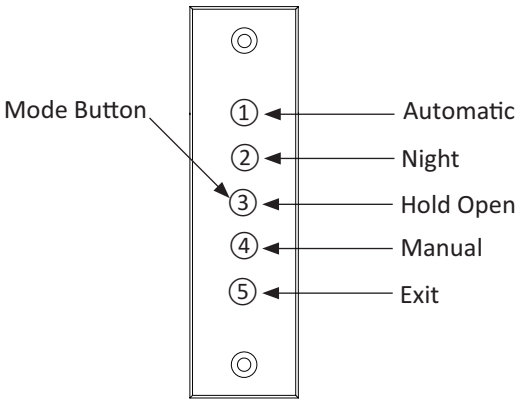

Switch		Description
Power Switch	ON	When the switch is in the ON postion, all activation signals are accepted and the door is ready for operation.
	OFF	▶ When the switch is in the OFF position, activation signals are not accepted by the Controller. ▶ The OFF position **does not** shut power OFF.

Mode Button	Icon	Definition	Description
1		Automatic	Door is opened by any activation
2		Night	Door can only be opened by an activation on the “Key” Input Terminal
3		Hold Open	Door will open and stay open
4		Manual	All activation devices are ignored
5		Exit	Only an activation on the Interior Sensor Terminal will open the Door

CHAPTER 7: FULL AUTOMATIC SWING DOOR

SECTION 7.1: Sensors

The Swing Door System can utilize a Sensor that activates the Swing Door with Infrared/Microwave technology, or Infrared technology, depending upon the brand.

- ▶ Sensor with Microwave/Infrared technology: Has a deeper detection zone and accomodates fast traffic conditions.
- ▶ Sensor with Infrared technology: Used to scan backwards to detect pedestrians in the threshold until the Slide door is fully closed.

SECTION 7.2: Sensor Types

7.2.1 Motion Sensor

Motion Sensors are used to activate the door when it detects a moving object, such as a pedestrian or a shopping cart. Motion sensors can typically distinguish between objects moving toward the door or away from the door. Motion sensors cannot detect still objects such as a person stopped in the Detection Zone.

7.2.2 Presence Sensor

Presence Sensors detect both moving and non-moving objects in the path of the door and signal the Control Unit accordingly. NABCO Entrances utilizes infrared technology in its presence sensors.

7.2.3 Motion/Presence Sensor

Motion/Presence Sensors provide motion detection, and pedestrain safety.

SECTION 7.3: Sensor Malfunctions

Table 1 Some (not all) Common cause examples for Sensor Malfunctions

The bed of a trolley: ▶ Is too low to the floor ▶ Surface of cart or trolley is not reflective enough to be detected. (Reflective tape or stickers can help)	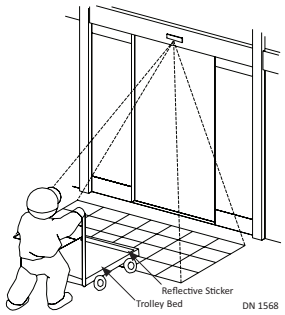
Sensor is exposed to: ▶ Steam ▶ Exhaust fume ▶ Insects ▶ Heavy rain ▶ Heavy snow	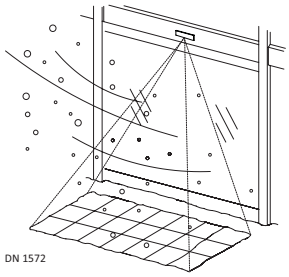
Presence Detection Zone is flooded with: ▶ Strong direct Sunlight ▶ Sunlight reflecting from floor (such as marble, or aluminum floors) ▶ Strong direct artificial light ▶ Artificial light reflecting from floor (such as marble, or aluminum floors) ▶ Lighting fixtures placed too close to the Sensor	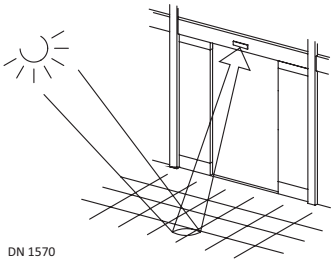
Pool of water located within Presence Detection Zone	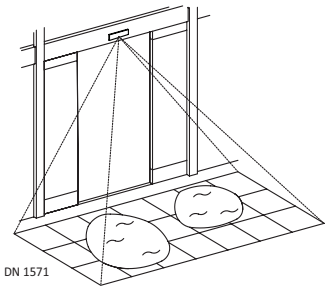
An object placed within the Presence Detection Zone that may be moving within the detection zone (like due to wind).	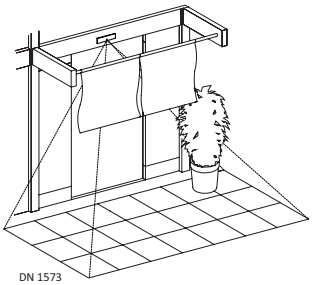

Multiple Sensors installed close to each other, or facing each other

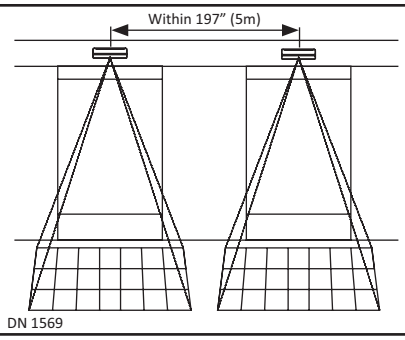

SECTION 7.4: Daily Safety Check

CAUTION **If the Swing Door will not be used for at least (1) month, it is recommended to turn Power OFF to the Unit.**

CAUTION **In order to guarantee reliability of the installation, any components showing signs of wear must be replaced as a preventive measure.**

CAUTION **If a Sensor is not working, the door may swing toward you without stopping.**

Attention: In the event any type of object needs to be removed from a Sensor Safety Zone (vicinity), the Sensor must "relearn" the zone before resuming normal operation. Relearn may take a minute or two.

The best time to perform a Daily Safety Check is early in the morning while pedestrian traffic is still restricted from Sensor activating zones. The purpose of a Daily Sensor Check is to ensure pedestrian safety and Owner protection.

7.4.1 Swing Door and Floor Area

1. Ensure the Power Breaker is switched ON. Do not switch Power Breaker ON and OFF too quickly.
2. Ensure the Power Switch is set to "ON".
3. Activate the Swing Door.
    1. Door should open at a slow smooth pace (4 or more seconds), and stop without impact.
    2. Door must remain fully open for a minimum of (5 seconds) before beginning to close.
    3. Door should close at a slow, smooth pace (4 or more seconds), and stop without impact.
4. Inspect the floor area. It should be clean with no loose parts that might cause user to trip or fall. Keep traffic path clear.
5. Inspect door's overall condition. The appropriate signage should be present and hardware should be in good condition.
6. Remove anything that does not belong in the path of the Swing door. There should be no bulletin boards, literature racks, merchandise displays, or other attractions in the door area that would interfere with use of the door or invite people to stop or stand in the door area.
7. Ensure the Header Cover, and all other hardware is properly secured.
8. Check for damaged or missing Weathering.
9. If Equipped: Test Emergency Break Out. In Break Out mode, the door must not activate. Call your supplier for details.
10. Have the Low Energy automatic door system inspected at least annually by an AAADM certified inspector.

7.4.2 Sensor Check for Activating Side of Swing Door

1. Walk toward the Swing Door at a normal pace. At about (4) feet away the Swing Door should start to open:
    1. The opening time of a Swing Door to 80 degrees shall not be less than 1.5 seconds.
    2. Door must remain fully open for a minimum of (1.5 seconds) after loss of detection.
    3. Closing time to Latch Check shall be a minimum of (2 seconds).
    4. Latch Check shall occur no less than 10 degrees, and the door shall close from that point no less than 1.5 seconds.
2. Stand motionless on the Threshold for at least (4) seconds. The door should not contact the pedestrian.
3. Stop in the Swing path and pause (10) seconds. The door should not contact the pedestrian.

4. Walk out of the Activating Zone.
   a. After a brief time delay (at least 1-1/2 seconds), the door should fully close smoothly, without impact.
   b. If two-way traffic, move toward swing side of door. Door should open well before the swing path is reached.
   c. If the Swing door closes (1) foot per second or faster, adjustments must be made.

7.4.3 Sensor Check for Safety Side of Swing Door

1. Walk toward the Safety side of Swing door. At the same time, have someone else approach the Activating side of the Swing door.
   a. If the door is equipped with an overhead mounted presence sensor, as long as you are in the Safety area of the door, it should not open. Please see Figure 1.

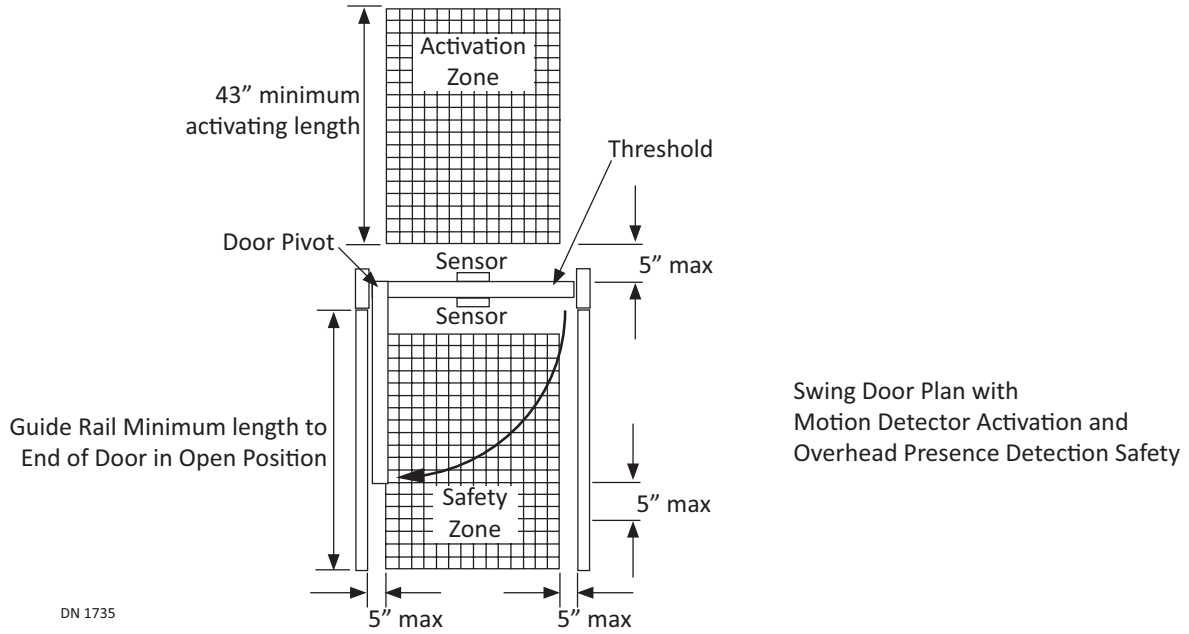

Figure 1 One-Way Traffic: Walk through Activation Zone

   b. If the door is equipped with a door mounted presence sensor, the door may start to open but should reverse, stop, or slow down. Please see Figure 2.

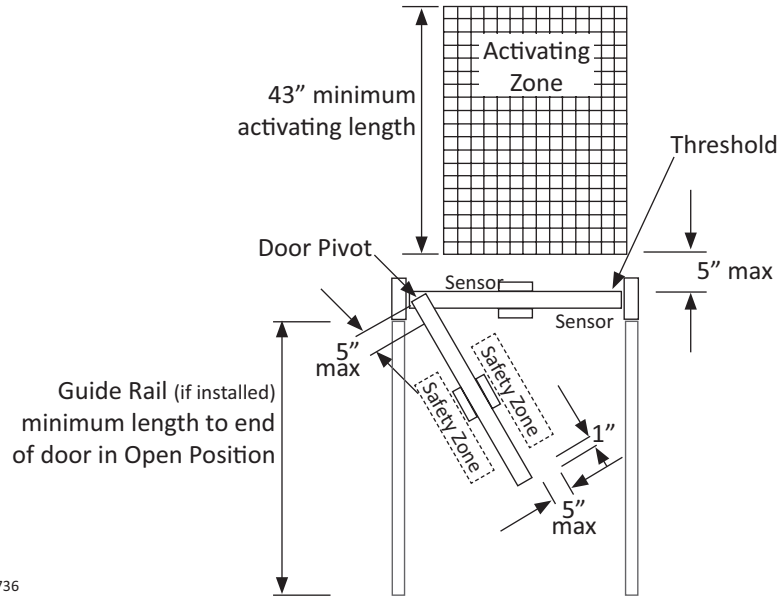

Figure 2 Walk through Activation Zone

7.4.4 Mat Activation Check for Activating Side of Swing Door

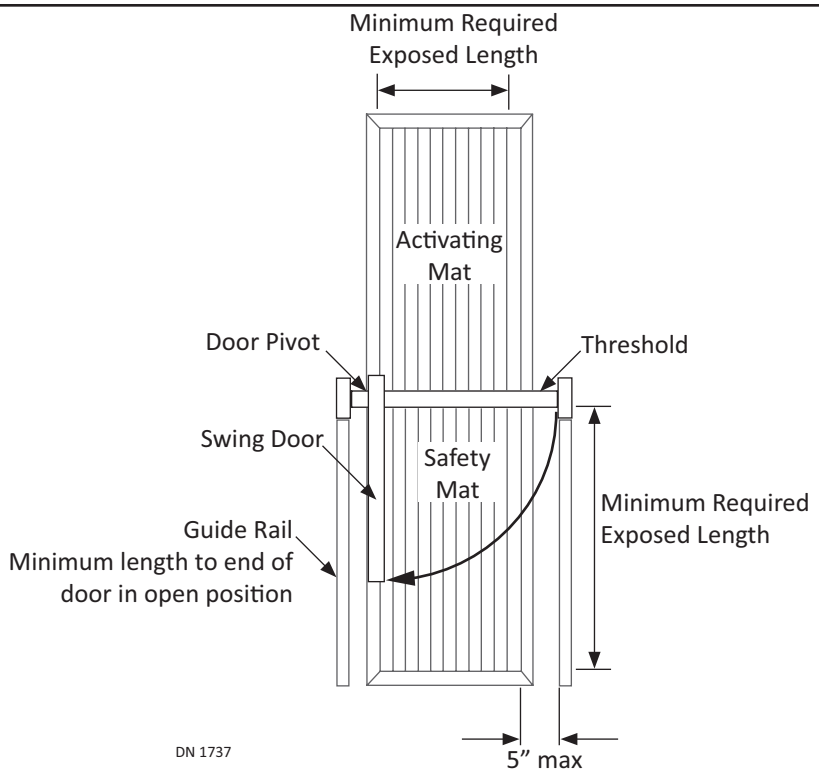

Figure 3 Activate Floor Mat

1. Ensure Floor Mat is in (1) piece and secured with all screws required.
2. Walk onto the Activating Mat.
3. Continue to walk through the Threshold, onto the Safety Mat.
4. Remain motionless for (4) seconds. The door should not contact the pedestrian.
5. Step off the mat.
   a. After a brief time delay (at least 1-1/2 seconds), the door should fully close without impact.
   b. If the Swing door closes (1) foot per second or faster, adjustments must be made.
6. Go back and step onto the Activating Mat in a different place.
7. Repeat steps 2-6 several more times.

7.4.5 Mat Activation Check for Safety Side of Swing Door

CAUTION **If the Safety Mat is not working, the door may swing toward you without stopping.**

The purpose of the Safety Mat is to hold the door open, or return the door to the open position when approached by a pedestrian from the other side. Safety Mats can be used for Two-Way Traffic and One-Way Traffic.

1. Ensure Safety Mat is in (1) piece and secured with all screws required.
2. With the Swing Door fully closed, walk onto the Safety Mat. At the same time, have someone else stand on the Activating Mat.
   a. As long as someone is standing on the Safety Mat, the Swing door should remain Fully Closed.

SECTION 7.5: Safety Decals for Full Automatic Swing Doors

Doors shall be equipped with signage visible from either side of the door, instructing the user as to the operation and function of the door. The signs shall be mounted 50” +/~ 12” (1270 mm +/- 305 mm) from the floor to the center line of the sign. The letters shall be 5/8 inch (16 mm) high minimum.

Decal	Description	
DO NOT Enter (side one) Directional Arrow (side two)	▶ Directional Signs used to define Traffic Flow. ▶ Adhere to swing door panel. ▶ Must be visible from both sides.	
Caution Automatic Door	▶ Adhere to both sides of swing door panel. ▶ Must be visible from both sides.	
AAADM Safety Information Label	▶ (1) Safety Information sign shall be adhered to Jamb Tube on Interior Side of Door Panel. ▶ The sign shall be a minimum of 9 inches tall. Black lettering shall be a minimum of 10 point type on a white background. White lettering shall be a minimum of 10 point type on a blue background.	

CHAPTER 8: LOW ENERGY SWING DOOR

Section 8.6: Daily Safety Check

CAUTION **If the Swing Door will not be used for at least (1) month, it is recommended to turn Power OFF to the Unit.**

CAUTION **In order to guarantee reliability of the installation, any components showing signs of wear must be replaced as a preventive measure.**

CAUTION **If a Sensor is not working, the door may swing toward you without stopping.**

Attention: **In the event any type of object needs to be removed from a Sensor Safety Zone (vicinity), the Sensor must "relearn" the zone before resuming normal operation. Relearn may take a minute or two.**

The best time to perform a Daily Safety Check is early in the morning while pedestrian traffic is still restricted from Sensor activating zones. The purpose of a Daily Sensor Check is to ensure pedestrian safety and Owner protection.

1. Ensure the Power Breaker is switched ON. Do not switch Power Breaker ON and OFF too quickly.
2. Ensure the (On/Off/Hold Open) Rocker switch is set to "ON".
3. Activate the Swing Door.
   1. Door should open at a slow smooth pace (4 or more seconds), and stop without impact.
   2. Door must remain fully open for a minimum of (5 seconds) before beginning to close.
   3. Door should close at a slow, smooth pace (4 or more seconds), and stop without impact.
4. Inspect the floor area. It should be clean with no loose parts that might cause user to trip or fall. Keep traffic path clear.
5. Inspect door's overall condition. The appropriate signage should be present and the hardware should be in good condition.
6. Remove anything that does not belong in the path of the Swing door. There should be no bulletin boards, literature racks, merchandise displays, or other attractions in the door area that would interfere with use of the door or invite people to stop or stand in the door area.
7. Ensure the Header Cover, and all other hardware is properly secured.
8. Check for damaged or missing Weathering.
9. If Equipped: Test Emergency Break Out. In Break Out mode, the door must not activate. Call your supplier for details.
10. Have the Low Energy automatic door system inspected at least annually by an AAADM certified inspector.

Section 8.7: Safety Decals for Low Energy Units

Doors shall be equipped with (a) decal(s) visible from either side, instructing the user as to the operation and function of the door. The decal shall be mounted 50 inches, +/- 12 inches, from the floor to the centerline of the decal. The letters shall be 5/8 inch high minimum.

Note: For additional decals or labels for automatic doors, call your automatic door supplier.

Decal	Description	
Activate Switch to Operate	▶ (2) Activate Switch signs, shall be adhered to both sides of door, with the words "Automatic Caution Door and Activate Switch to Operate" to be clearly visible. ▶ The sign shall be a minimum of 6 inches in diameter. Black lettering shall be a minimum 5/8 inch tall on a yellow background. White lettering shall be a minimum 1/2 inch tall on a blue background.	
AAADM Safety Information Label (Low Energy Swing Doors)	▶ (1) Safety Information sign shall be adhered to Jamb Tube on Interior Side of Door Panel. ▶ The sign shall be a minimum of 9 inches tall. Black lettering shall be a minimum of 10 point type on a white background. White lettering shall be a minimum of 10 point type on a blue background.	
Pull to Operate	When Push/Pull is used to initiate the operation of the Door Operator	
Push to Operate		
Easy Open Door Push to Operate	When Power Assist is used to initiate the operation of the Door Operator	
Easy Open Door Pull to Operate		