NABCO ENTRANCES TECHNICAL BULLETIN

S82 W18717 Gemini Drive, PO Box 906
Muskego, WI, 53150
Phone: (877) 622-2694, Fax: (888) 679-3319
www.NabcoEntrances.com

Effective Date: March 21, 2006

Who is the technical contact?
Mike Buckley

Reconfiguring Rocker Switch on Swing Doors with U Series Control

Issue: On current rocker switch configurations, if the rocker switch (P/N 12-9551) is set to HOLD OPEN while the door is open, the door will first fully close before going to HOLD OPEN.

Reason: The rocker switch must first pass through the OFF position before switching to HOLD OPEN. This momentarily turns off the control thereby causing the door to first close.

Solution: To eliminate this, re-wire the rocker switch as shown below. The wording on rocker switch face plate will also need to be changed as shown below. Note: a new wire must be connected *in parallel* with the 9DC12V BROWN on the control's main harness (refer to tagged wires on control harness). This wire is routed to a pin on the rocker switch as shown. A 1000 ohm 1/4 watt resistor is also added as shown in the diagram. We will be making this change to current production models soon.

PART # 12-9551 - CURRENT SWITCH TEXT AND WIRING

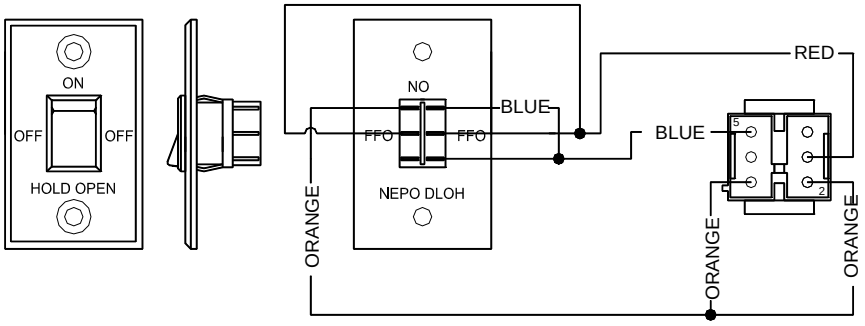

PART # 22-11350 - REVISED SWITCH TEXT AND WIRING

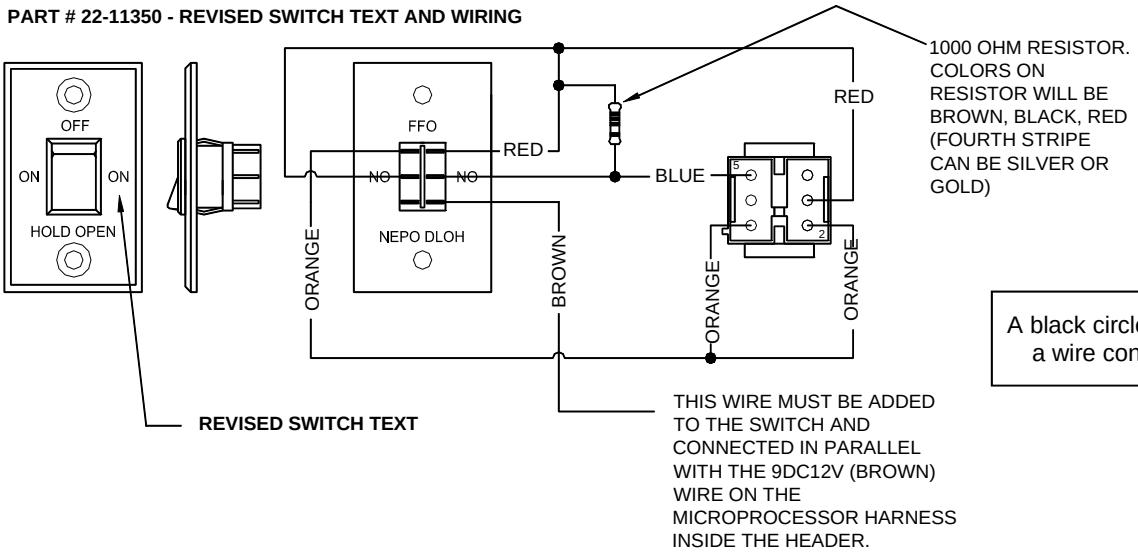

A black circle indicates a wire connection.

Revised 6/16/06
Added switch part numbers

Bulletin Number: **37**