NABCO Entrances Inc.
S82 W18717 Gemini Drive Muskego, WI 53150
www.nabcoentrances.com 1-877-622-2694

JOB NAME: _____

LOCATION: _____

DISTRIBUTOR: _____

DOOR #: _____ DATE: _____

SHEET ____ OF ____

GT2100B
BI-PART SLIDE
FULL OPEN
TRACKLESS

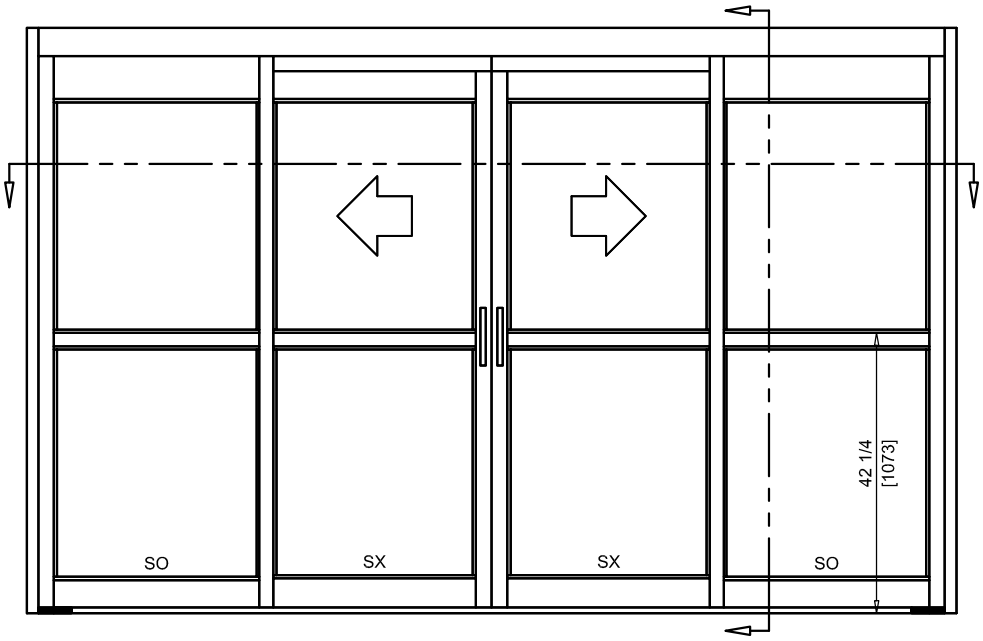

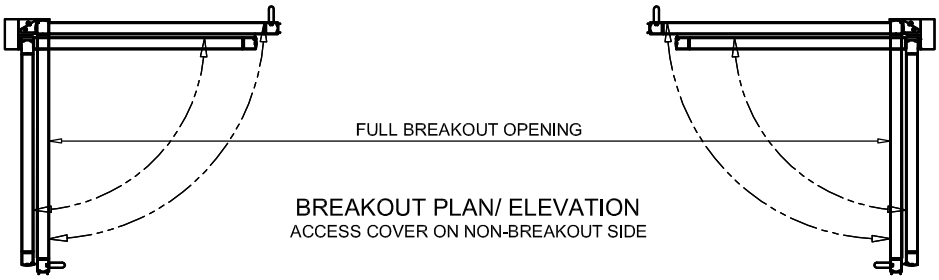

BREAKOUT PLAN/ ELEVATION
ACCESS COVER ON NON-BREAKOUT SIDE

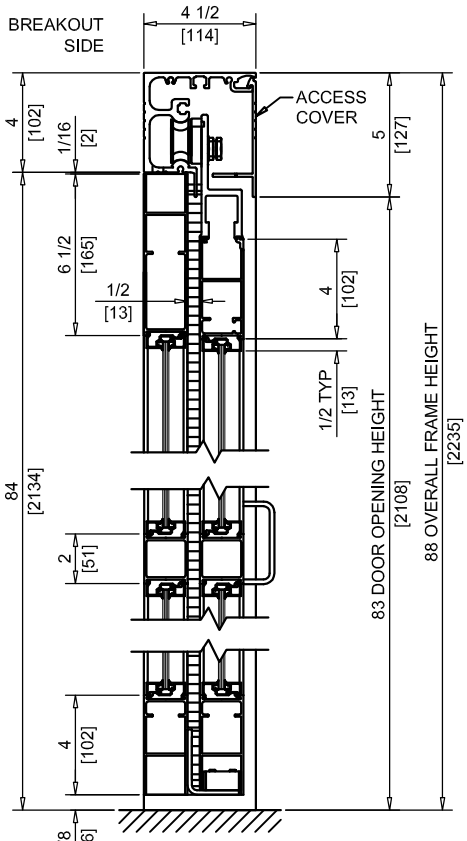

VERTICAL SECTION
(WITH DOOR OPEN)

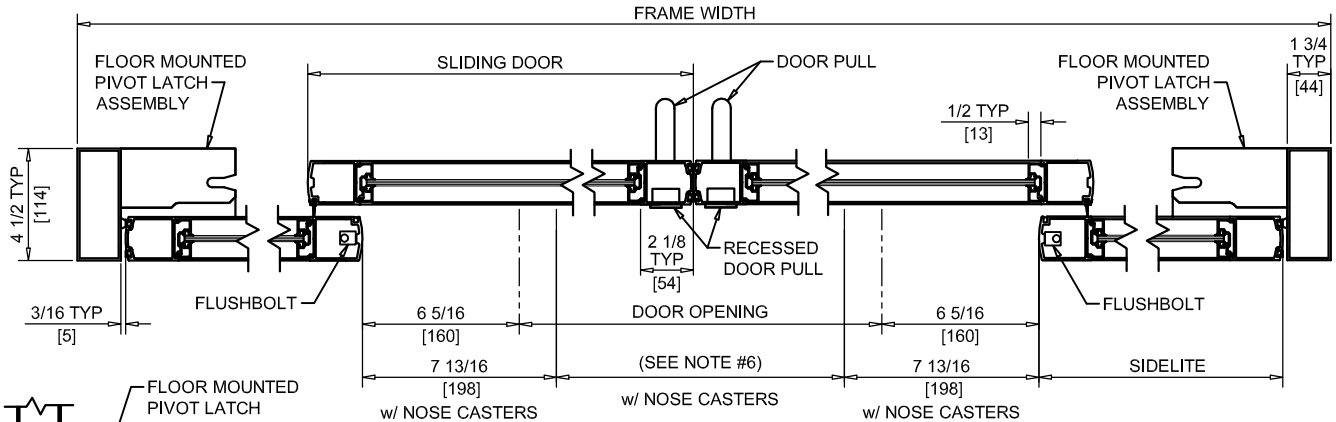

HORIZONTAL SECTION

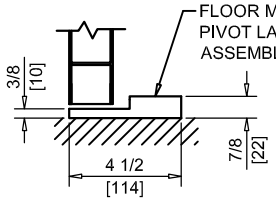

PIVOT LATCH

DOOR OPENING (SEE NOTE 6)	FULL BREAKOUT OPENING	FRAME WIDTH	SLIDING DOOR	SIDELITE
48" [1219]	109 5/8" [2784]	10'-2 1/4" [3105]	32 7/8" [835]	28 7/8" [733]
60" [1524]	133 5/8" [3394]	12'-2 1/4" [3715]	38 7/8" [987]	34 7/8" [886]
72" [1829]	157 5/8" [4004]	14'-2 1/4" [4324]	44 7/8" [1140]	40 7/8" [1038]
84" [2134]	181 5/8" [4613]	16'-2 1/4" [4934]	50 7/8" [1292]	46 7/8" [1191]
96" [2438]	208 5/8" [5299]	18'-5 1/4" [5620]	58 3/8" [1483]	52 7/8" [1343]

NOTES:

1. "D" HANDLE PROVIDED ON NON BREAKOUT SIDE. RECESSED HANDLE PROVIDED ON BREAKOUT SIDE. UNITS REQUIRING "D" HANDLES ON BOTH SIDES WILL HAVE REDUCED DOOR OPENING WIDTH BY 1 1/2" [38]. DOOR AND SIDELITE WIDTHS ARE MODIFIED FOR TWO "D" HANDLE APPLICATIONS.
2. NO FLOOR TRACK TO INTERFERE WITH TRAFFIC.
3. BREAKOUT ONLY FROM FULL OPEN POSITION AFTER RELEASE OF FLUSHBOLT.
4. UNITS ARE HANDED FROM THE BREAKOUT SIDE.
5. VINYL WEATHERING IS STANDARD.
6. CASTERS ARE REQUIRED ON ALL PANELS GREATER THEN 54" WIDE AND/OR 200 LBS OR MORE. UNITS REQUIRING CASTERS WILL HAVE REDUCED DOOR OPENING WIDTH BY 1 1/2" [38]. DOOR AND SIDELITE WIDTHS ARE MODIFIED WHEN CASTERS ARE INSTALLED.
7. ROUGH OPENING EQUALS FRAME WIDTH +1/2" AND FRAME HEIGHT +1/4".
8. SELF CLOSING AND HOLD OPEN (REQUIRES POWER TO HEADER) FEATURES OPTIONAL ON UNITS WITH SX PANELS UNDER 135 LBS.

Effective Date: 03 NOV 2014